INTRODUCTION
Chrysler A604

Since the introduction of the Chrysler A604 Transaxle in model year 1990, there have been many engineering changes to improve Pleaseability, Driveability, and Durability concerns. These changes have affected many parts used in the A604 transaxle. This "update handbook" will explain each change, and any parts interchangeability problem created by the change, along with any part numbers deemed necessary.

COPYRIGHT ATSG© 1990

**We thank the Chrysler Corp.
for the illustrations and information
that made this booklet possible**

The information and part numbers contained in this booklet have been carefully compiled from industry sources known for their reliability, but ATSG does not guarantee its accuracy.

ROBERT D. CHERRNAY
TECHNICAL DIRECTOR

DALE ENGLAND
FIELD SERVICE CONSULTANT

FRANK MIETUS
TECHNICAL CONSULTANT

WAYNE COLONNA
TECHNICAL CONSULTANT

WELDON BARNETT
TECHNICAL CONSULTANT

ED KRUSE
LAY OUT

AUTOMATIC TRANSMISSION SERVICE GROUP
9200 SOUTH DADELAND BLVD.
SUITE 720
MIAMI, FLORIDA 33156
(305) 661-4161

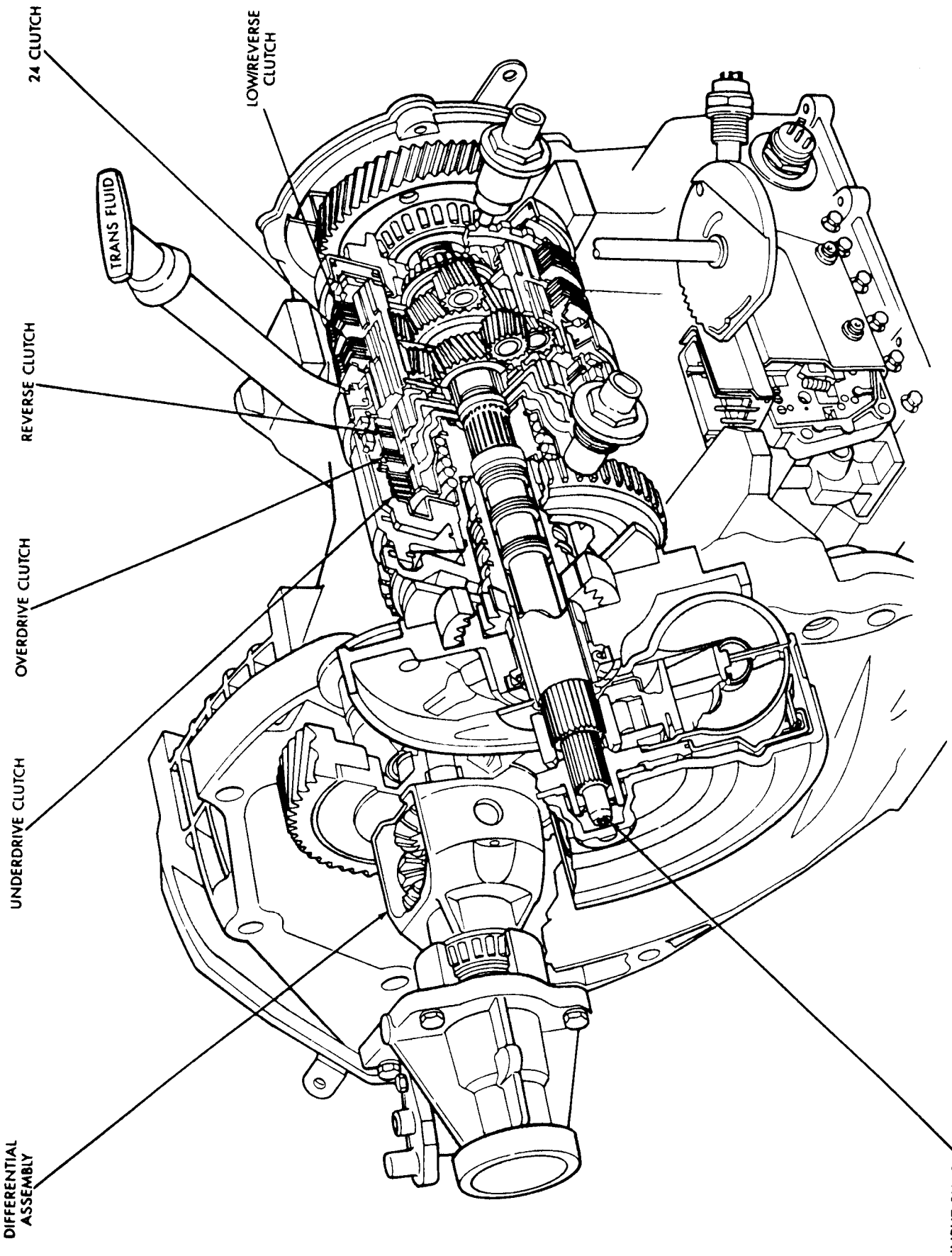
24 CLUTCH
LOW/REVERSE CLUTCH
TRANS FLUID
REVERSE CLUTCH
OVERDRIVE CLUTCH
UNDERDRIVE CLUTCH
DIFFERENTIAL ASSEMBLY
INPUT SHAFT

INDEX

NEW 4 RING STATOR 4
NEW LIP SEALS 8
NEW PARKING GUIDE BRACKET AND PARKING PAWL 10
NEW TRANSAXLE CONTROLLER AND LOCATIONS 12
NEW BELL HOUSING BOLT PATTERNS 15
NEW 4 DISC OVERDRIVE CLUTCH ASSEMBLY 20
NEW PRNODL AND NEUTRAL SAFETY SWITCHES 26
NEW GEAR RATIOS AND IDENTIFICATION 28
NEW (5TH DESIGN) TRANSAXLE CONTROLLER 32
NEW 1990 1/4 OVERDRIVE/REVERSE PISTON 33
NEW 1990 1/4 INPUT CLUTCH HUB 38
2/4 AND L/R CLUTCH PACKS (ASSEMBLY TIP) 42
PREMATURE FAILURE OF O.D. AND REVERSE CLUTCHES 45
FAULT CODES 46
FAULT CODE EXPLANATION 47
DIAGNOSTIC CONNECTOR LOCATION 72

Copyright 1990 ATSG

Information and part numbers contained in this handbook have been carefully compiled from industry sources known for their reliability, but ATSG does not guarantee its accuracy.

AUTOMATIC TRANSMISSION SERVICE GROUP

CHRYSLER A604

NEW 4 RING STATOR

CHANGE: Beginning in April, 1989 a new Reaction Shaft Support (Stator) was introduced, with the addition of another ring groove and sealing ring. The old support has 3 sealing rings, and the new support has 4 sealing rings (See Figure 1).

REASON: Improved control of oil flow to the Underdrive (Forward) Clutch, the Overdrive (3-4) Clutch, and the Reverse Clutch.

PARTS AFFECTED:

(1) REACTION SHAFT SUPPORT - The new support is longer, and has 4 sealing rings, where the old support only has three (See Figure 1).

(2) INPUT SHAFT/CLUTCH HUB - The new Input Clutch Hub bore is machined deeper to accomodate the additional length of the reaction shaft, created by the added sealing ring (See Figure 2).
The "O" Ring grooves are also cut shallower than the old input clutch hub, which increases the groove diameter, and provides improved compression or "Crush", between the "O" rings and the input clutch retainer. (See Figure 2).

(3) INPUT SHAFT/CLUTCH HUB "O" RINGS - The new "O" Rings are "Teflon Coated" for greater tear resistance during the assembly process. The coatings also identify the locations for the "O" Rings. The orange ring goes to the front, and the green one goes to the rear (See Figure 2). The early "O" rings were black.

(4) INPUT CLUTCH RETAINER - The Input Clutch Retainer was modified, by machining off the "Lip" (See Figure 3), to allow more travel of the overdrive/reverse piston. The old Input Clutch Retainer can be machined at the local machine shop if necessary.

(5) SPACER PLATE - The new Spacer Plate has a larger (.105") overdrive clutch feed orifice to provide increased oil flow to the overdrive clutch circuit (See Figure 4).

(6) TRANSAXLE CONTROLLER - If the Transaxle Controller is part number 5234623 or 5234649, REPLACE it with a 5234678 controller.

INTERCHANGEABILITY:

ALWAYS UPDATE to the four ring reaction shaft support. There is now available a repair package, OEM part number 4549248, that includes the following:

1. Reaction Shaft Support.
2. Input Clutch Hub.
3. Input Clutch Hub "O" Rings.
4. Spacer PLate.

SERVICE INFORMATION:

Repair Package	4549248
Gasket Package	4504558
Controller (As Required)	5234678
"O" Ring (Orange)	6502272
"O" Ring (Green)	6502270
Input Clutch Retainer (No Lip)	4431609

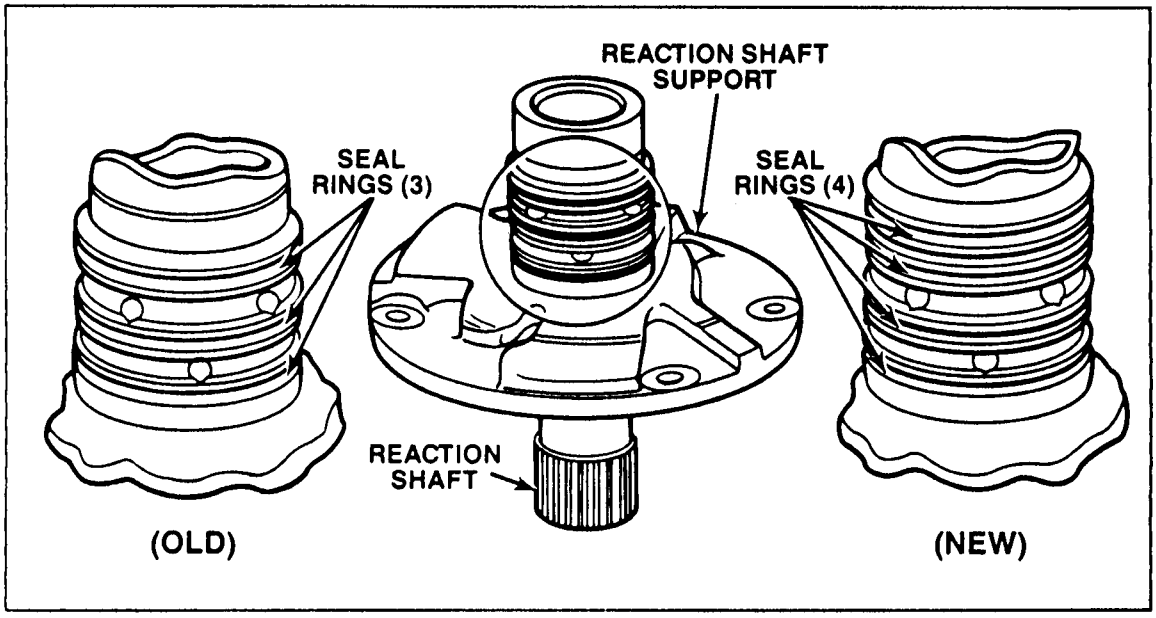

Figure 1

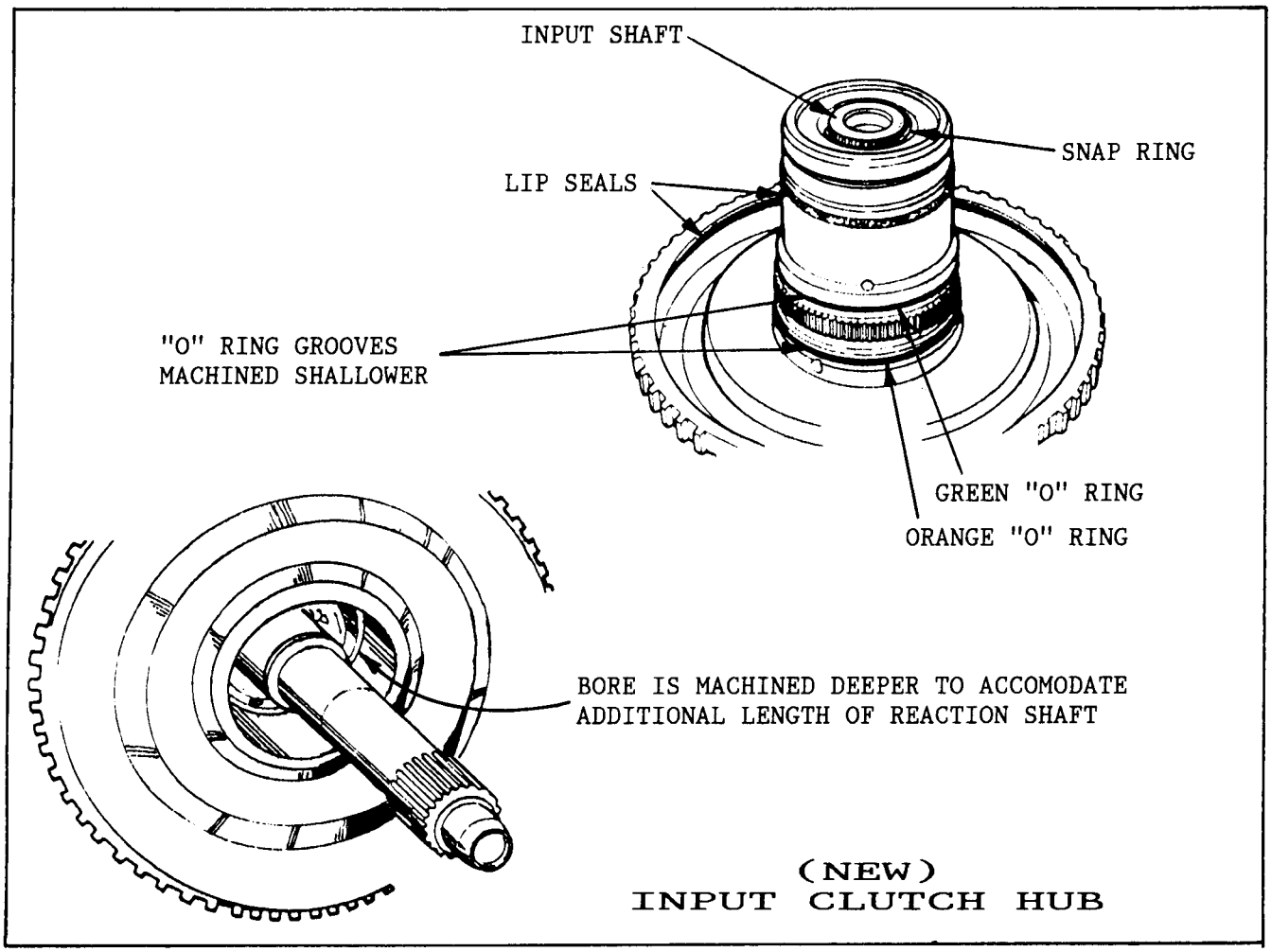

Figure 2

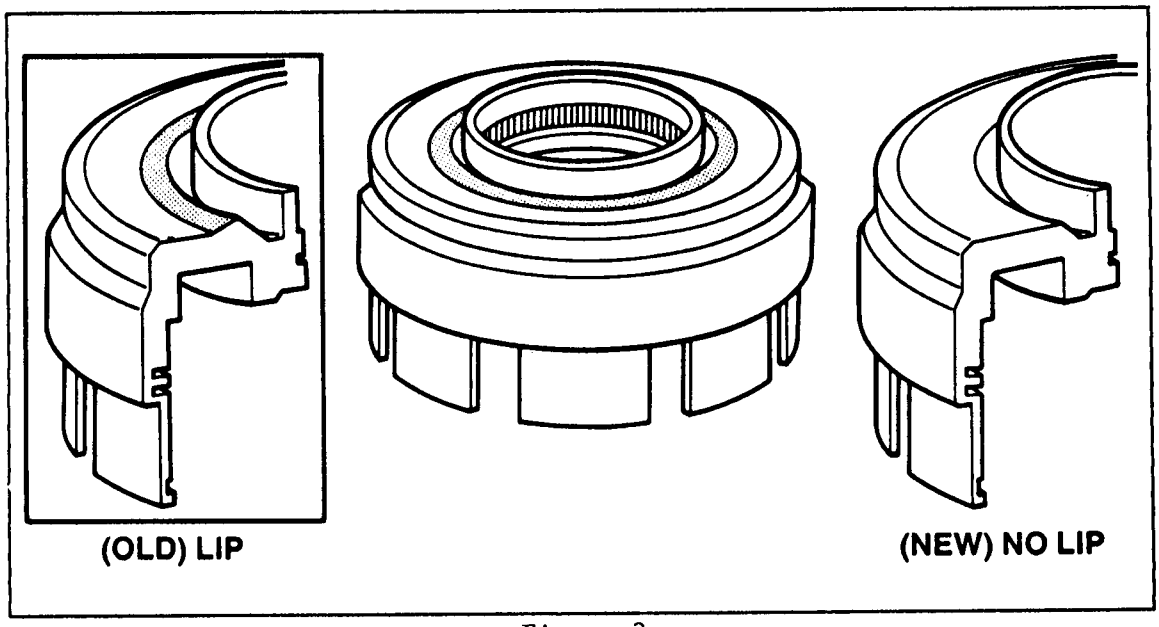

Figure 3

A604 SPACER PLATE

HOLE "C" ENLARGED TO .105" FOR INCREASED OIL FLOW

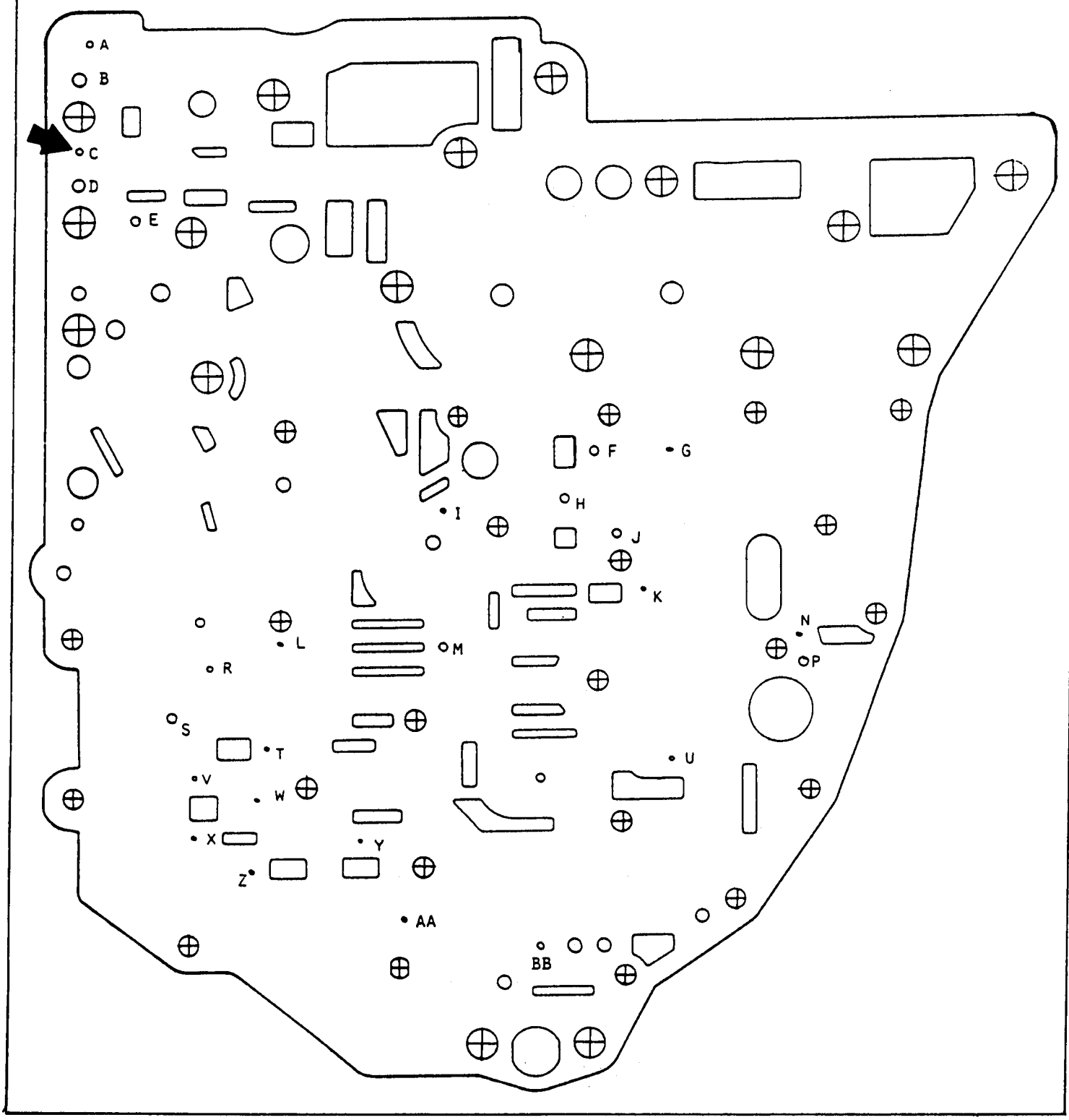

Figure 4

CHRYSLER A604

NEW LIP SEALS

CHANGE: The lip seals in the Overdrive/Reverse Clutch Piston and the Input Shaft/Clutch Hub are now replaced with lip seals made of different material (See Figure 5).

REASON: Improved reliability of the Overdrive and Reverse clutch packs.

PARTS AFFECTED:

(1) OD/REVERSE PISTON LIP SEAL - No dimensional changes, but the material changes, and the new lip seals can be identified by the code "FF" embossed into the seal. The old lip seal is embossed with the code "IPC", and should not be used (See Figure 5).

(2) INPUT CLUTCH HUB OUTER LIP SEAL - No dimensional changes, but the material changes, and the new lip seals can be identified by the code "FF" embossed into the seal. The old lip seal is embossed with the code "IPC", and should not be used (See Figure 5).

INTERCHANGEABILITY:

THE NEW LIP SEALS EMBOSSED WITH THE CODE "FF" WILL RETRO-FIT BACK TO ALL PREVIOUS MODELS, AND SHOULD BE USED DURING OVERHAUL.

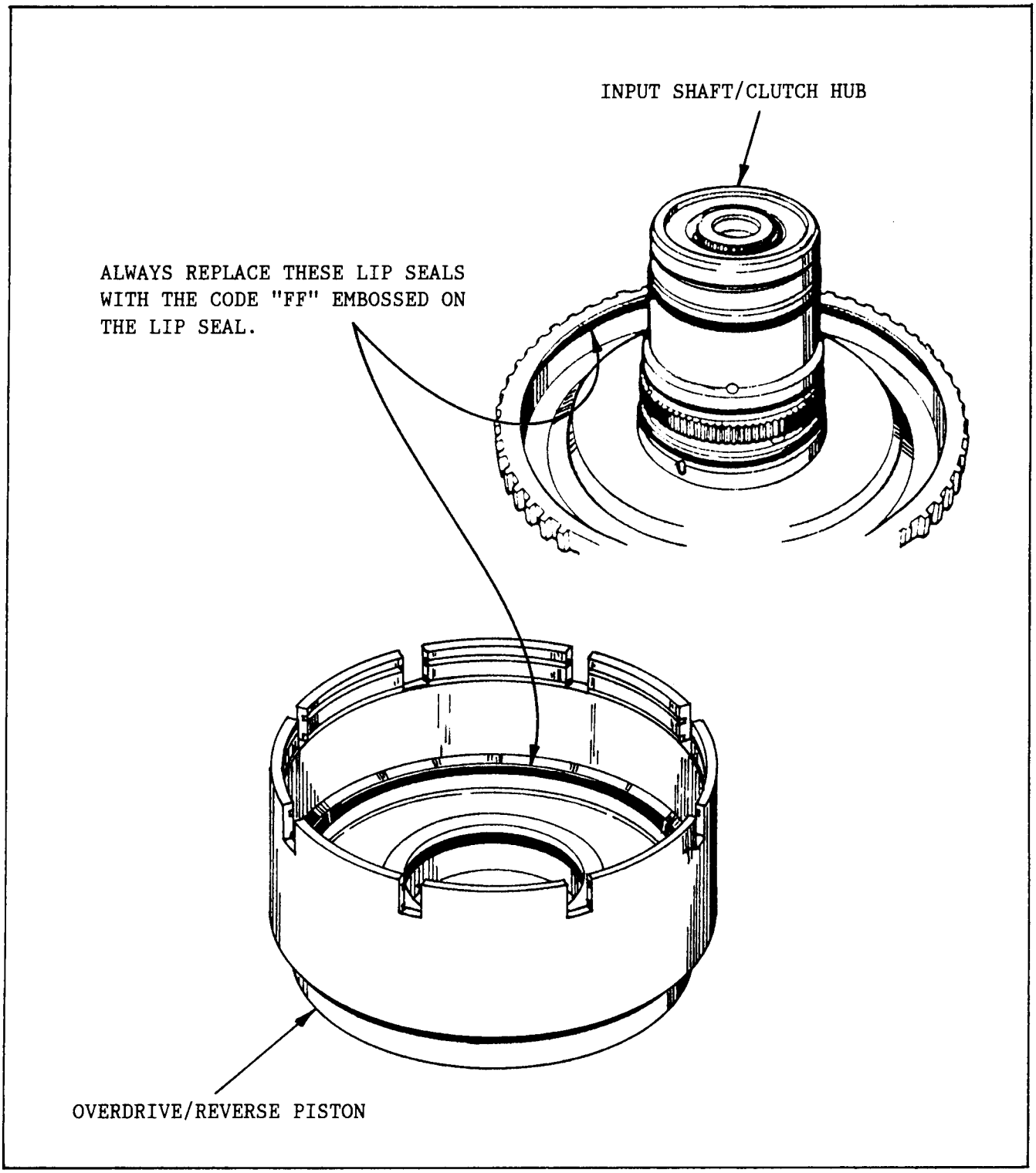
INPUT SHAFT/CLUTCH HUB
ALWAYS REPLACE THESE LIP SEALS WITH THE CODE "FF" EMBOSSED ON THE LIP SEAL.
OVERDRIVE/REVERSE PISTON

Figure 5

CHRYSLER A604

NEW PARKING GUIDE BRACKET AND PAWL

CHANGE: A new Parking Sprag Guide Bracket and Parking Pawl has been introduced as a 1989 running change (See Figure 6).

REASON: Reduced effort required to pull the shift lever out of "Park" to the other drive ranges.

PARTS AFFECTED:

(1) PARKING GUIDE BRACKET - Previously the Parking Guide Bracket was a stamped steel unit, and has been replaced by a high quality casting, along with dimensional changes. See Figure 6 for identification.

(2) PARKING PAWL - The new Parking Pawl, or "Boot", also required some dimensional changes. The heel of the new "Boot" is wider than the previous models, as shown in Figure 6.

INTERCHANGEABILITY:

The new parts will retro-fit back to all previous models, but both pieces must be replaced as an assembly. (See Figure 6).

SERVICE INFORMATION:

Parking Pawl Service Package 4549239
Includes the following:
(1) Parking Guide Bracket (New Style)
(2) Parking Pawl or "Boot" (New Style)

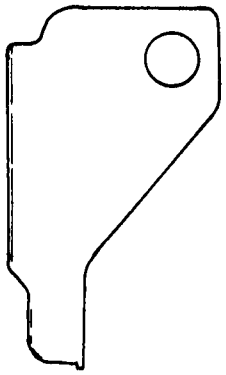

PARKING GUIDE BRACKET

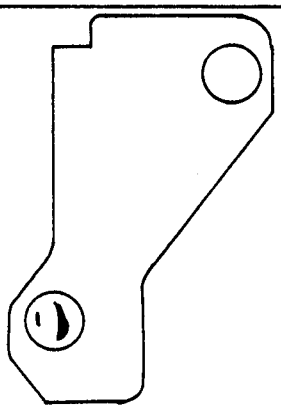

PARKING GUIDE BRACKET

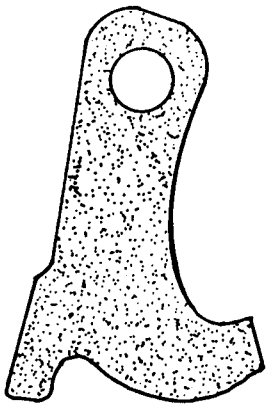

PARKING PAWL

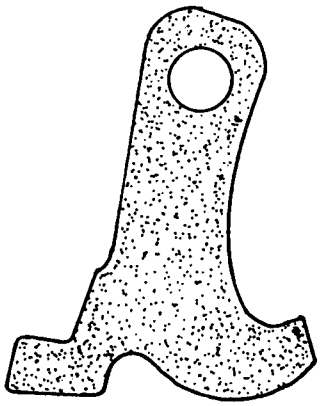

PARKING PAWL

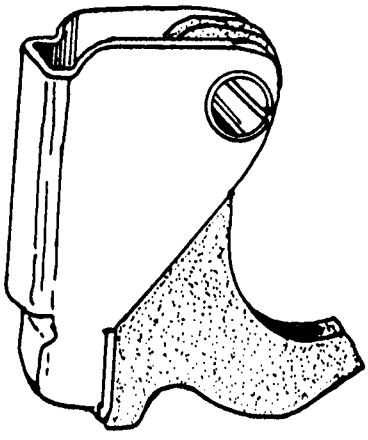

COMPLETE ASSEMBLY

PREVIOUS

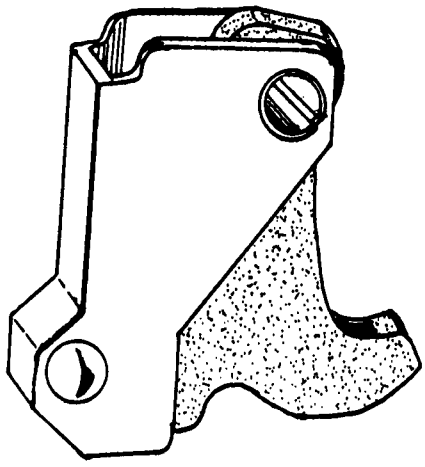

COMPLETE ASSEMBLY

NEW

Figure 6

CHRYSLER A604

NEW TRANSAXLE CONTROLLER

CHANGE: A running change for 1989 also included a software upgrade, with the addition of a new #120 Transaxle Controller.

REASON: The new #120 Transaxle Controller offers sequential closed throttle downshifts, highway anticycling logic, permits earlier kickdown shifts to improve acceleration, and high altitude compensation to improve loss of engine power at high altitudes.

PARTS AFFECTED:

(1) TRANSAXLE CONTROLLER - The controllers are identified by the last three digits of the OEM part number. The part number is on a sticker that is located on the bottom of the controller as shown in Figure 7.
The locations of the controllers will vary depending on the model of the vehicle. Refer to Figure 7 for the different locations. Figure 7 and 8 also shows the locations of the EATX relay, as their location will also vary depending on the model of the vehicle.

INTERCHANGEABILITY:

The new #120 Transaxle Controller will retro-fit back to ALL previous model A604 transaxles equipped with the earlier part numbers 5234623, 5234649, or 5234678.

NOTE: When updating earlier controllers, do not Routinely replace the controller P/N 5234678 with P/N 4557120, Unless the customer has encountered highway cycling driveability conditions.
When updating controller P/N 5234623 or P/N 5234649, by all means use controller P/N 4557120.

SERVICE INFORMATION:

Transaxle Controller (New Design) 4557120

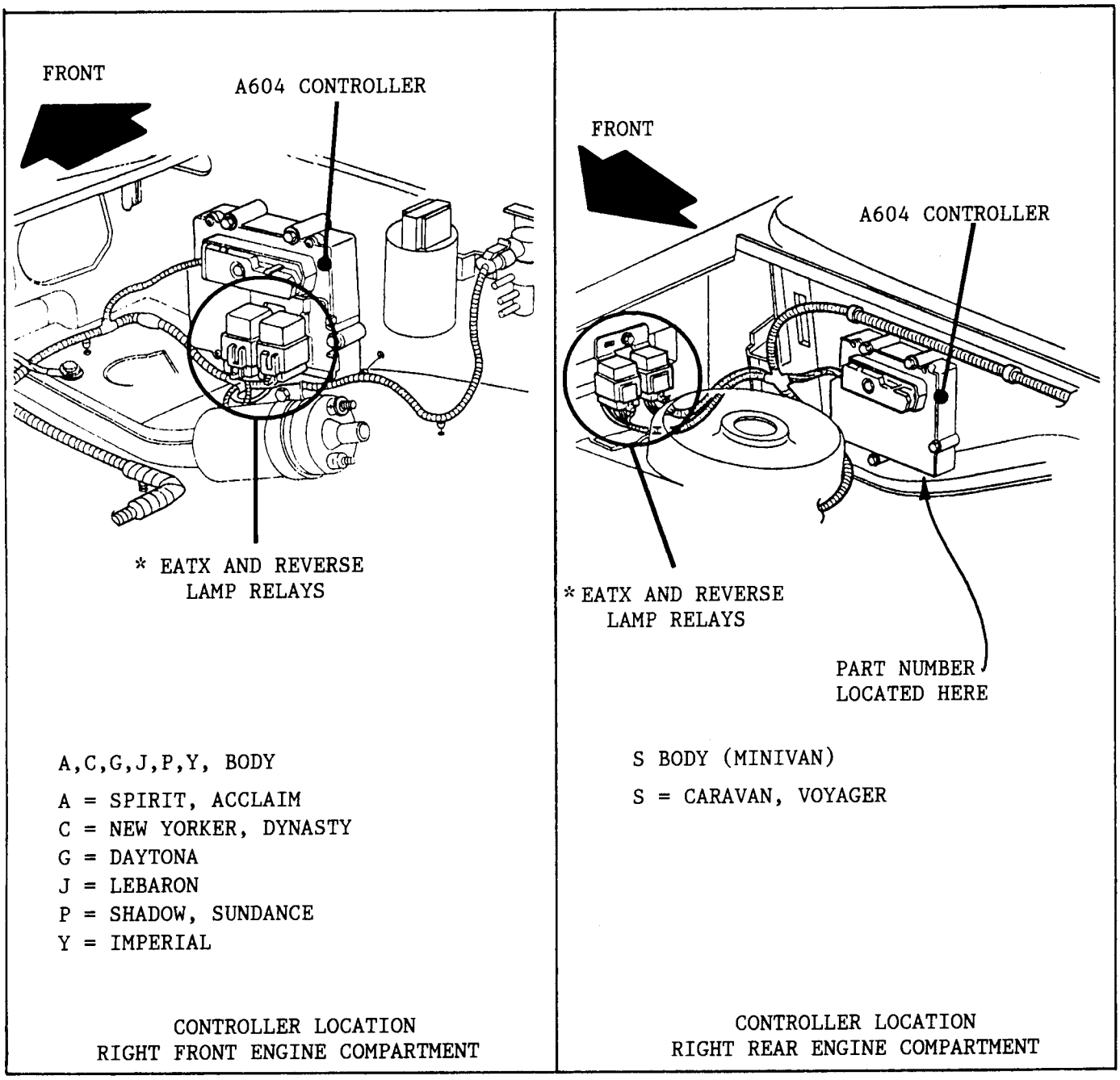

Figure 7

* NOTE: Since the EATX and the Reverse Lamp Relay connectors could be installed in either position, you must use the wire colors in the connectors to identify the correct relay.

(1) The EATX Relay has a Red and a Light Green wire in its connector.

(2) The Reverse Lamp Relay has a White and a Violet wire in its Conn.

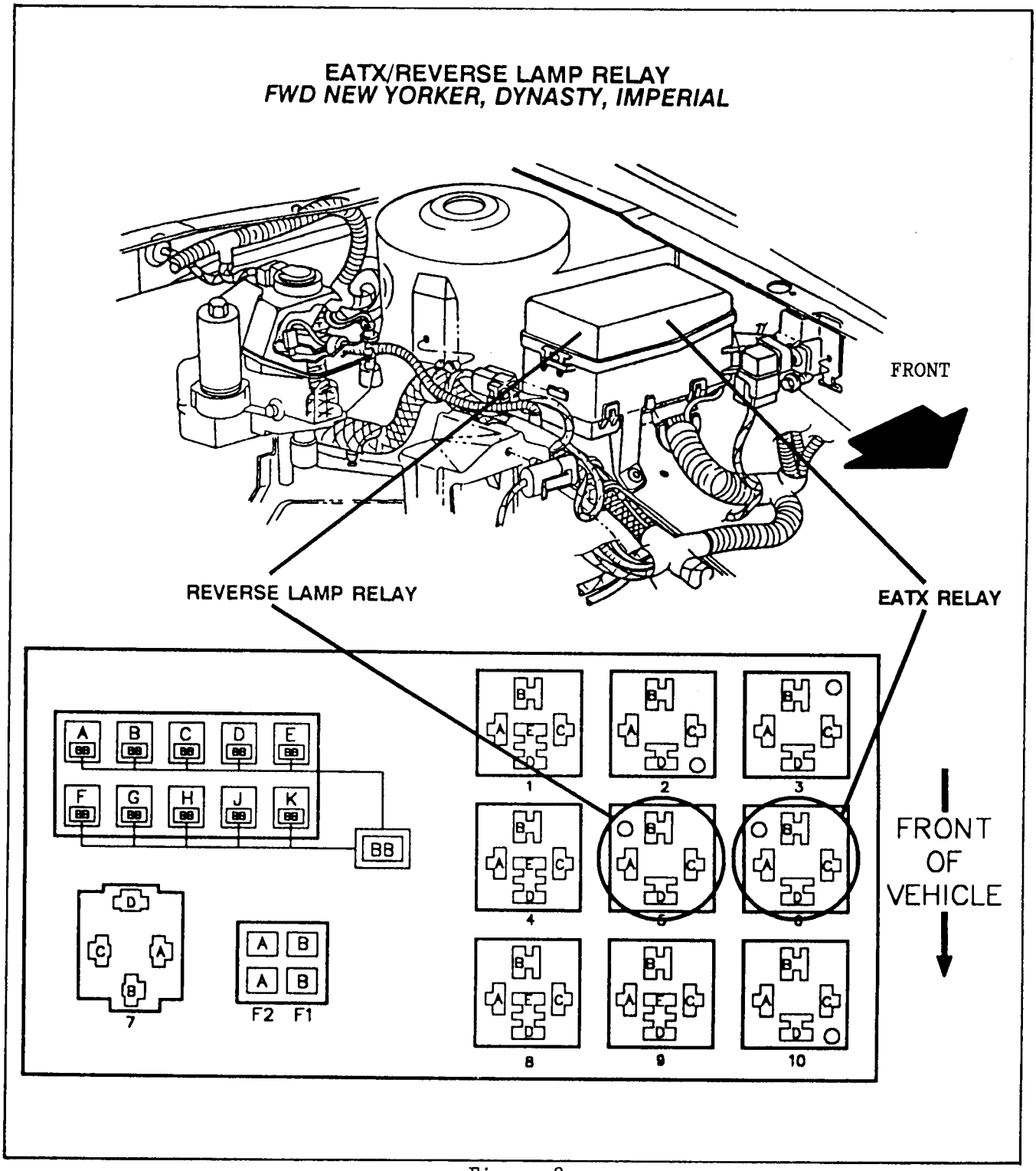
EATX/REVERSE LAMP RELAY
FWD NEW YORKER, DYNASTY, IMPERIAL
FRONT
REVERSE LAMP RELAY
EATX RELAY
A B C D E
F G H J K
BB
D C A B
7
A B A B
F2 F1
1
2
3
4
5
6
8
9
10
FRONT OF VEHICLE

Figure 8

CHRYSLER A604

NEW BELL HOUSING PATTERNS

CHANGE: The A-604 now has three different bell housing patterns, 2.5L (4 Cyl), 3.0L (V-6), and 3.3L (V-6).

REASON: Expanded model coverage.

PARTS AFFECTED:

(1) TRANSAXLE CASE - Because of the three different engines that are now used, it requires three different bell housing bolt patterns.
For the 2.5 Litre Bell Housing pattern, refer to Figure 9.
For the 3.0 Litre Bell Housing pattern, refer to Figure 10.
For the 3.3 Litre Bell Housing pattern, refer to Figure 11.

(2) TURBINE SHAFT SPLINES - The 2.5 Litre engine uses a turbine shaft with 22 splines for the torque converter, and the 3.0 and 3.3 Litre engines will use the current 24 spline turbine shaft (See Figure 12).

INTERCHANGEABILITY:

Not Interchangeable.

SERVICE INFORMATION:

2.5 Litre Case (573 Cast on Bell)	4505572
3.0 Litre Case (631 Cast on Bell)	4446652
3.3 Litre Case (577 Cast on Bell)	4505576
22 Spline Input Shaft (2.5L Only)	4505579
24 Spline Input Shaft (3.0L and 3.3L Only)	4412210

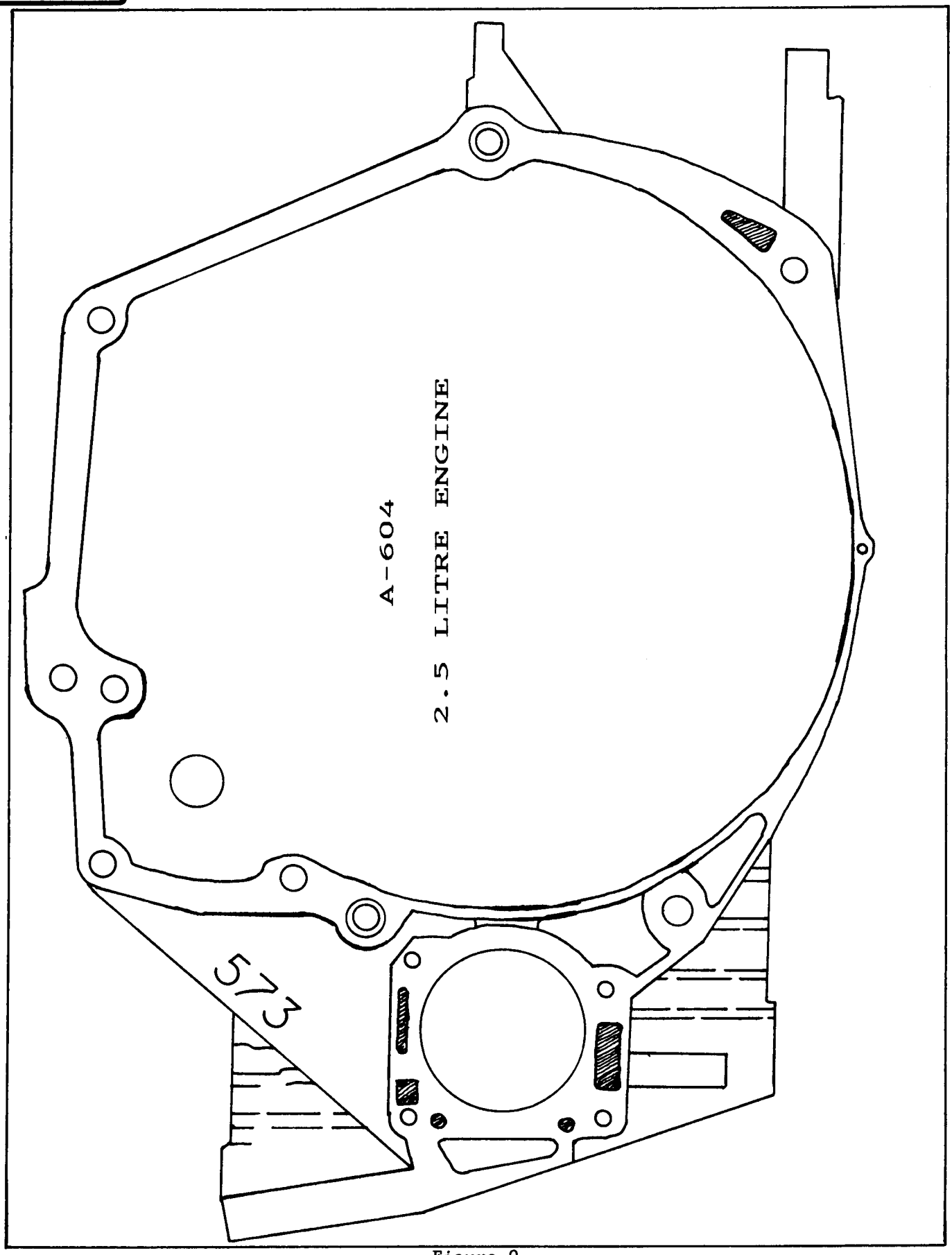

Figure 9

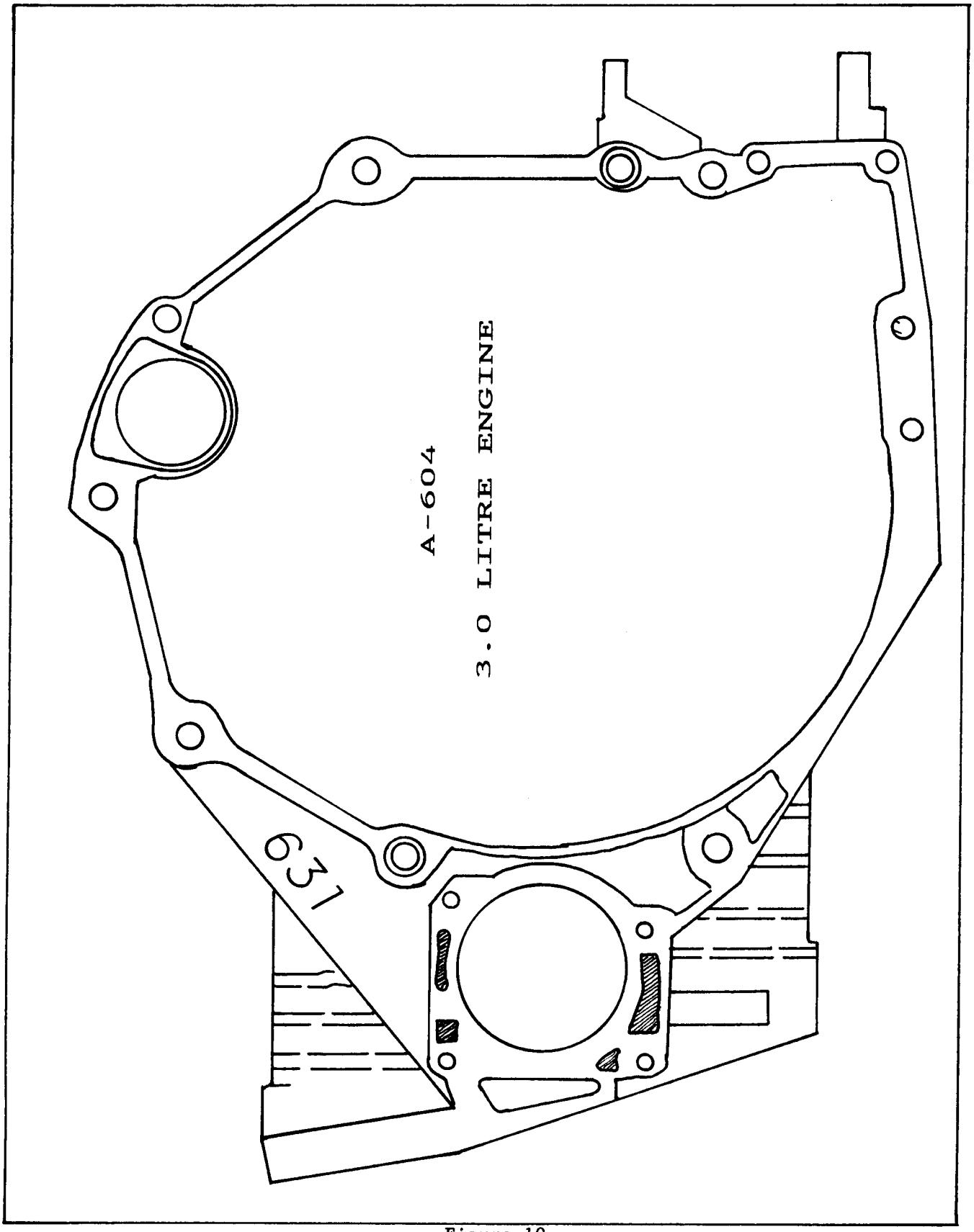

Figure 10

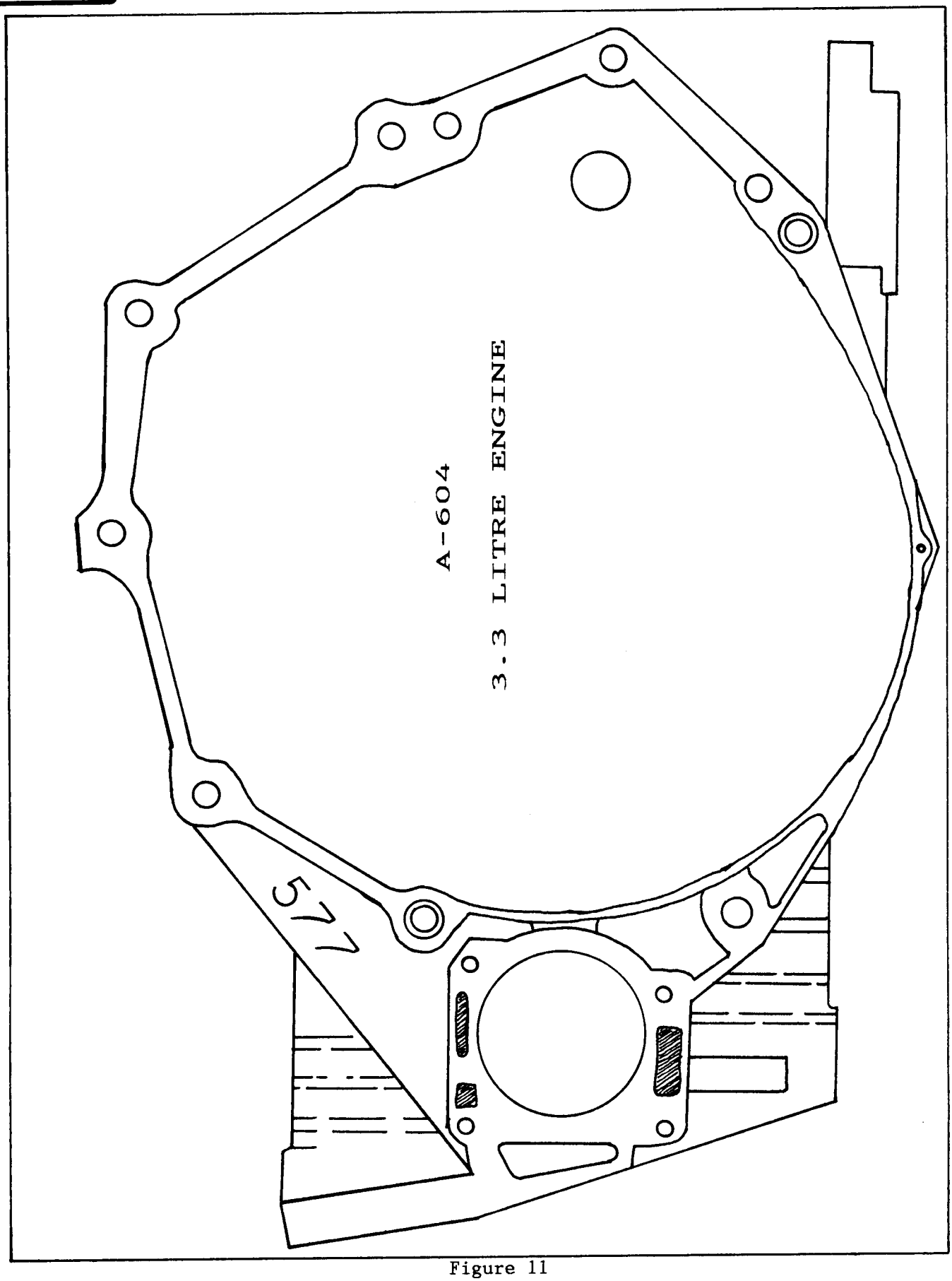

Figure 11

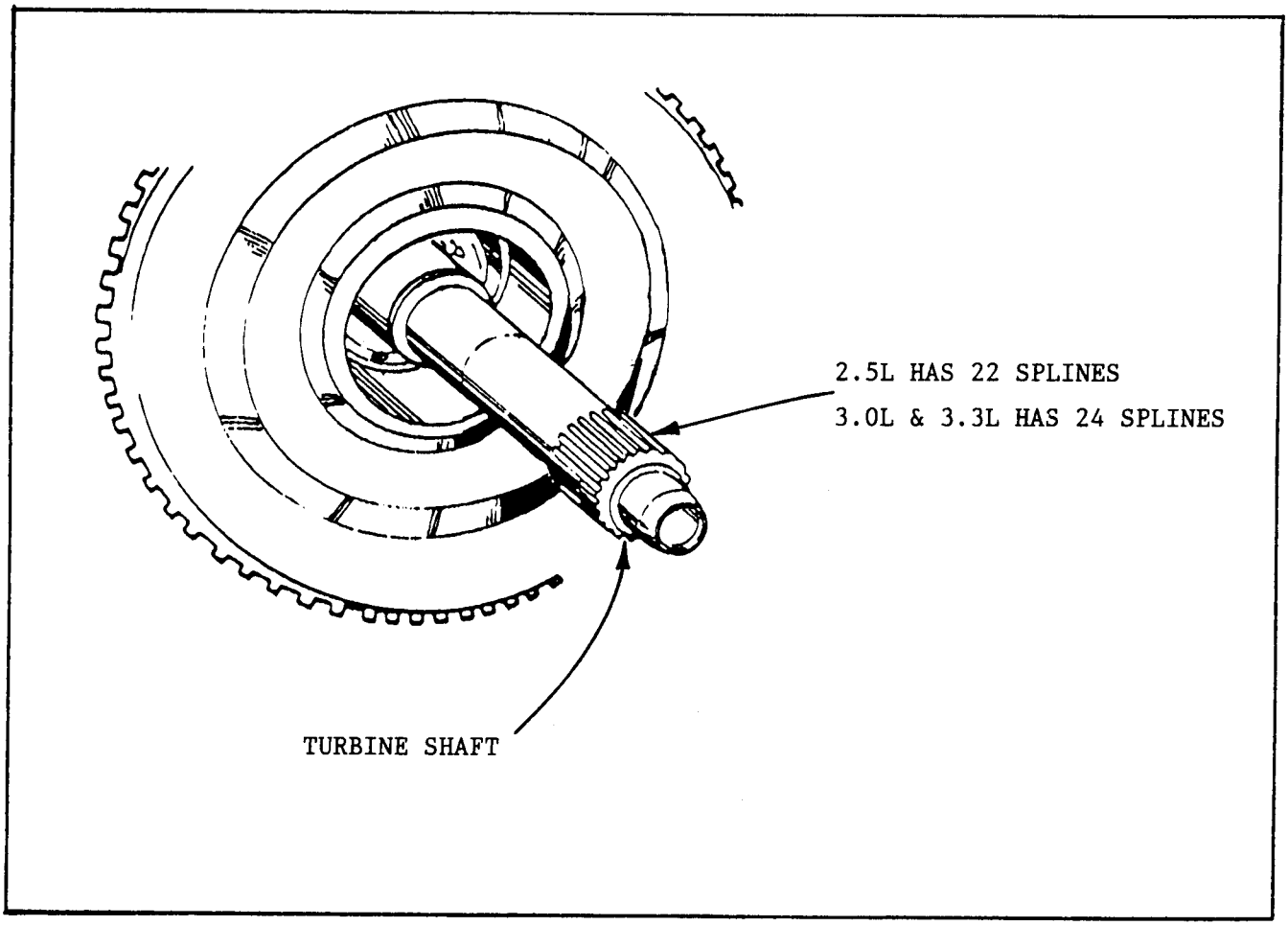

Figure 12

CHRYSLER A604

FOUR DISC OVERDRIVE CLUTCH ASSEMBLY

CHANGE: A running change for 1990 model A604 transaxles was the introduction of a four (4) disc Overdrive Clutch Assembly, to replace the previous three (3) disc assembly (See Figure 13).

REASON: Higher horsepower (3.3L V-6) engines introduced in New Yorker, Dynasty, Imperial, Caravan, and Voyager models.

PARTS AFFECTED:

(1) OVERDRIVE LINED PLATES - Now uses 4 lined plates instead of the previous 3 lined plates, and the lined plates for 1990 models are .014" thinner than the 1989 lined plates (See Figure 13), to help accomodate the extra lined plate. The 1989 lined plates will measure .083"-.088" thick, and the new lined plates will measure .069"-.074" thick (See Figure 13).

(2) OVERDRIVE STEEL PLATES - Now uses 3 steel plates instead of the previous 2 steel plates. The new steel plates are .030" thinner, and measure .068"-.072" thick. The previous steel plates measure .098"-.102" thick. (See Figure 13).

(3) UNDERDRIVE/OVERDRIVE REACTION PLATES - The 1989 Underdrive/Overdrive Reaction Plates have always been available in 4 different thicknesses to obtain proper clutch clearance. For 1990, each plate was reduced in thickness by .040", to help accomodate the extra overdrive plates. (See Figure 14).

(4) INPUT CLUTCH RETAINER - The underdrive/overdrive reaction plate tapered snap ring groove was moved "Down" by .040" (Can be Detected Visually) to accomodate the thinner underdrive/overdrive reaction plates (Figure 15). Another change that occured at the same time is the underdrive clutch outer lip seal groove depth is .040" "Shallower" to accomodate a new underdrive clutch outer lip seal (See Figure 16).

(5) UNDERDRIVE/OVERDRIVE TAPERED SNAP RING - The thickness of this snap ring was reduced by .010". The 1990 snap ring is easily identified, as they will be either Green, or White, in color. The previous 1989 snap rings were Blue in color. They WILL NOT interchange.

(6) UNDERDRIVE CLUTCH OUTER LIP SEAL - The lip seal cross section has been reduced by .040" (Smaller in Overall Diameter) to accomodate the change in the depth of the groove in the input clutch retainer (See Figure 16). The OEM part number is printed on the seals for identification. The 1989 (Large) is 4377173, and the 1990 (Small) is 4531408. This will confirm that you have the proper seal for this location (See Figure 16).

INTERCHANGEABILITY:

None of the parts listed above will interchange with one another between 1989 and 1990 model years. It is imperative that you "Positively" I.D. each part to insure that you are assembling with compatable parts.

SERVICE INFORMATION:

1989 MODEL YEAR:

Overdrive Lined Plates	4377167
Overdrive Steel Plates	4377190
Underdrive/Overdrive Reaction Plates (Selective)	
.254"-.258" Thick	4377185
.274"-.277" Thick	4377186
.293"-.297" Thick	4377187
.312"-.316" Thick	4377188
Input Clutch Retainer	4431609
Underdrive/Overdrive Tapered Snap Ring (BLUE)	4377189
Underdrive Clutch Outer Lip Seal	4377173

1990 MODEL YEAR:

Overdrive Lined Plates	4505629
Overdrive Steel Plates	4377183
Underdrive/Overdrive Reaction Plates (Selective)	
.215"-.219" Thick	4531570
.234"-.238" Thick	4531569
.253"-.257" Thick	4531568
.273"-.277" Thick	4531567
Input Clutch Retainer	4505623
Underdrive/Overdrive Tapered Snap Ring (GREEN or WHITE)	4531411
Underdrive Clutch Outer Lip Seal	4531408

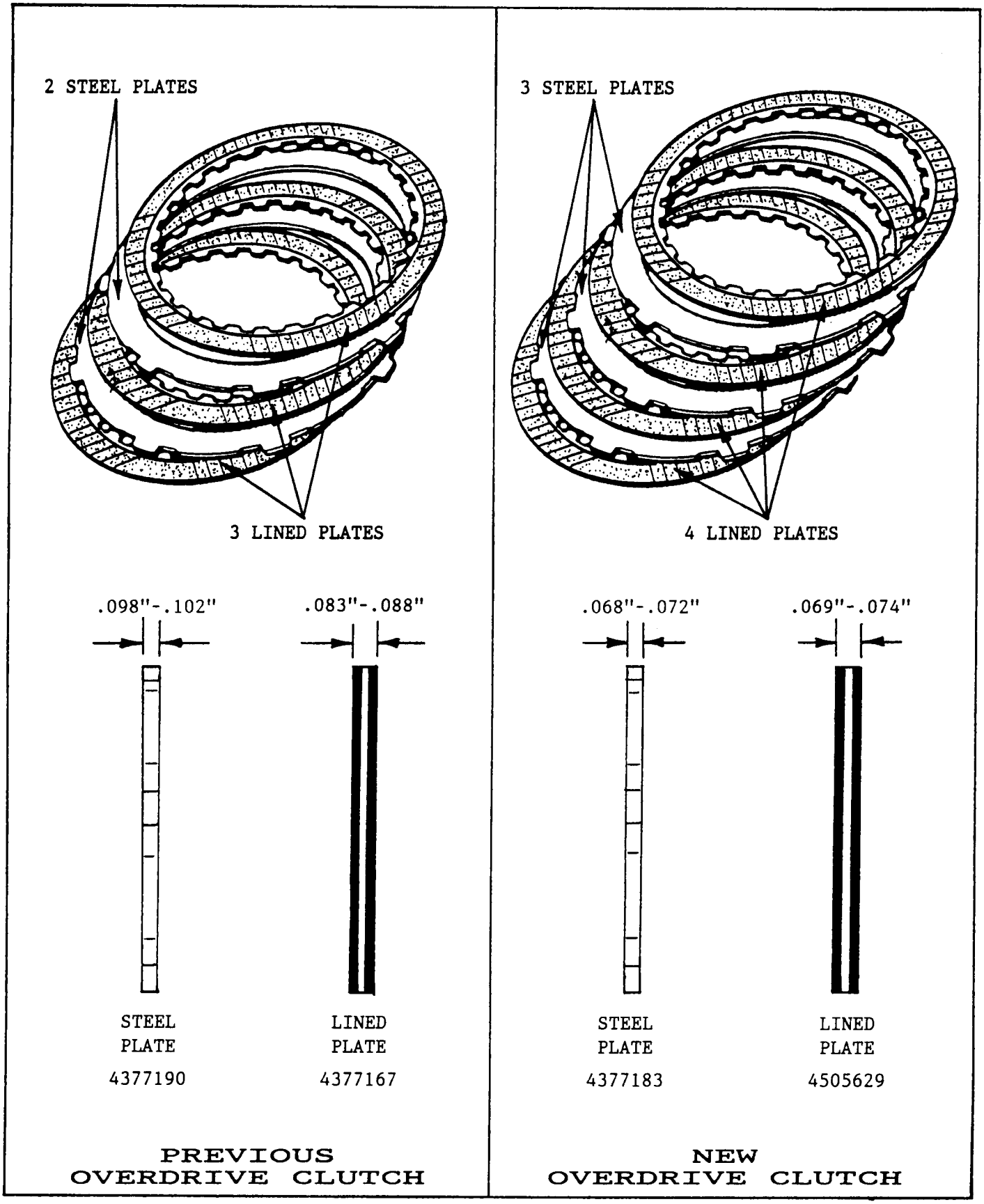
2 STEEL PLATES
3 LINED PLATES
.098"-.102"
.083"-.088"
STEEL PLATE 4377190
LINED PLATE 4377167
PREVIOUS OVERDRIVE CLUTCH
3 STEEL PLATES
4 LINED PLATES
.068"-.072"
.069"-.074"
STEEL PLATE 4377183
LINED PLATE 4505629
NEW OVERDRIVE CLUTCH

Figure 13

UNDERDRIVE/OVERDRIVE REACTION PLATES (SELECTIVE)

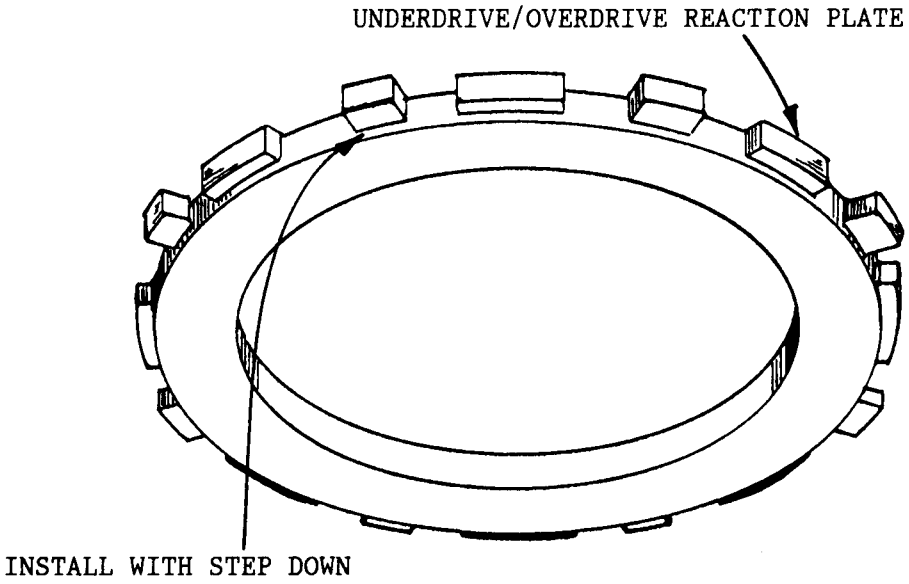

1989 MODEL YEAR

.254"-.258" THICKNESS	4377185
.274"-.277" THICKNESS	4377186
.293"-.297" THICKNESS	4377187
.312"-.316" THICKNESS	4377188

1990 MODEL YEAR

.215"-.219" THICKNESS	4531570
.234"-.238" THICKNESS	4531569
.253"-.257" THICKNESS	4531568
.273"-.277" THICKNESS	4531567

FOR 1990, EACH REACTION PLATE WAS REDUCED IN THICKNESS BY .040", TO ACCOMODATE THE EXTRA OVERDRIVE PLATES.

Figure 14

INPUT CLUTCH RETAINER

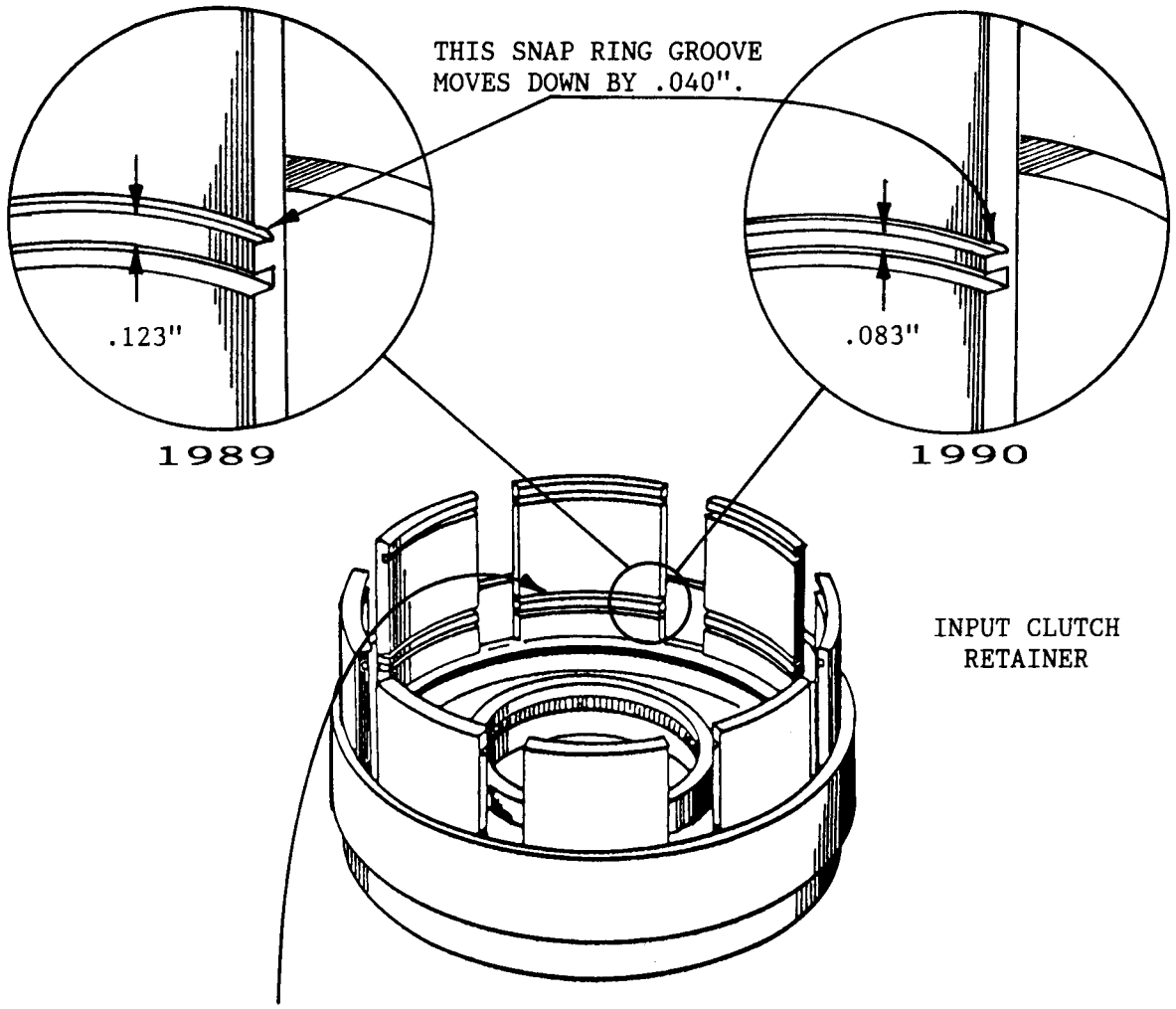

1989 INPUT CLUTCH RETAINER 4431609

1990 INPUT CLUTCH RETAINER 4505623

Figure 15

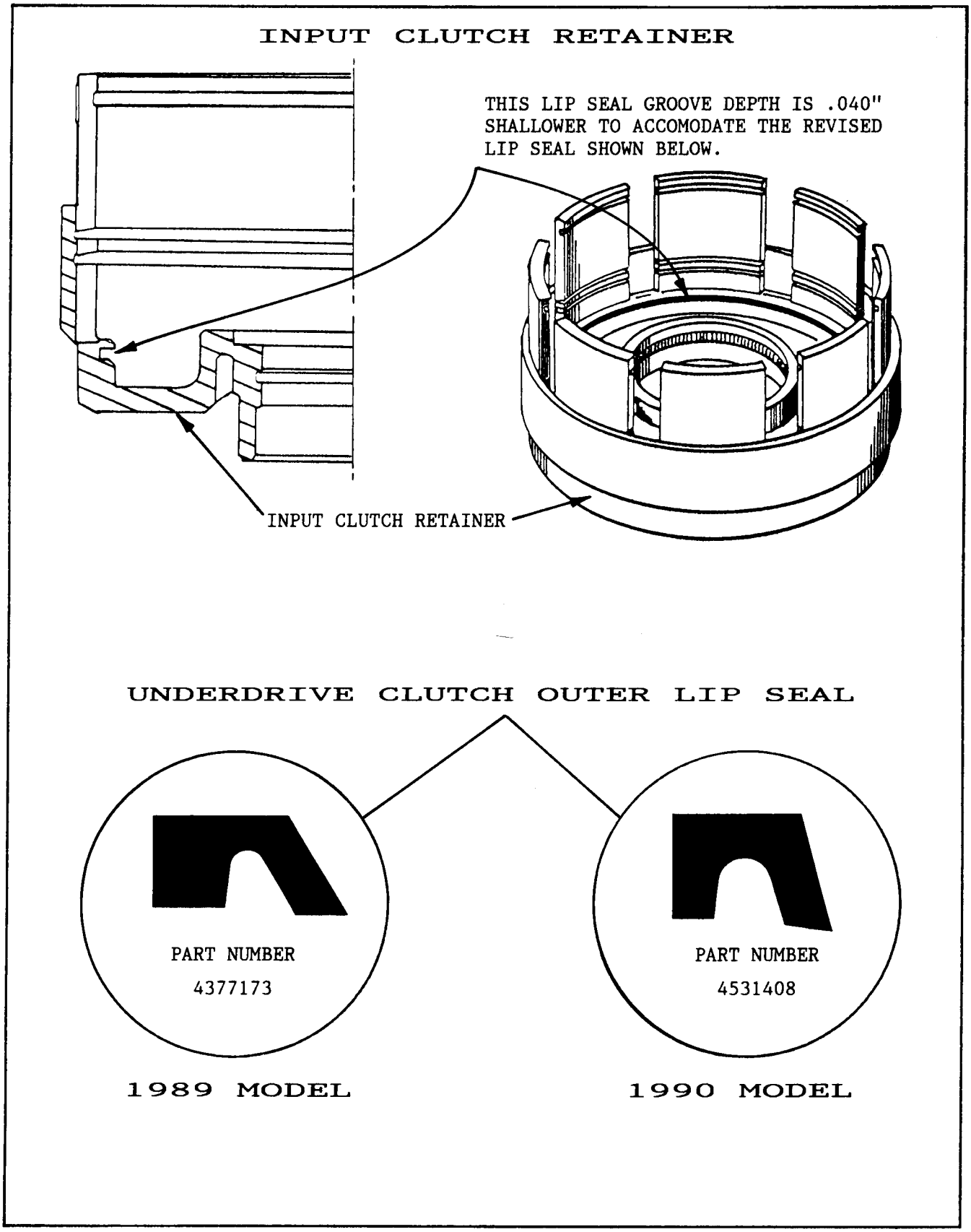
INPUT CLUTCH RETAINER
THIS LIP SEAL GROOVE DEPTH IS .040" SHALLOWER TO ACCOMODATE THE REVISED LIP SEAL SHOWN BELOW.
INPUT CLUTCH RETAINER
UNDERDRIVE CLUTCH OUTER LIP SEAL
PART NUMBER
4377173
1989 MODEL
PART NUMBER
4531408
1990 MODEL

Figure 16

CHRYSLER A604

NEW PRNODL AND NEUTRAL SAFETY SWITCHES

CHANGE: PRNODL Switch and Neutral Safety Switch have been changed for the 1990 model year, as well as the vehicle wiring harness connectors. Refer to Figure 17 for location of switches on the transaxle.

REASON: Positive locking mechanism, with a weathertight seal, to prevent the connection from becoming loose.

PARTS AFFECTED:

(1) PRNODL SWITCH AND CONNECTOR - The PRNODL Switch and its wiring harness connector have changed for 1990, and can be identified visually (See Figure 18). These PRNODL Switches WILL NOT interchange with one another.

(2) NEUTRAL SAFETY SWITCH AND CONNECTOR - The Neutral Safety Switch and its wiring harness connector have changed for 1990, and can be identified visually (See Figure 19). These Neutral Safety Switches WILL NOT interchange with one another.

INTERCHANGEABILITY:

The 1989 and 1990 Switches are not compatable with one another and WILL NOT interchange between these model years.

NOTE: Each of the new for 1990 switches may look similar at first glance, but the PRNODL switch features a "Coarse" thread, while the Neutral Safety switch is black and features "Fine" threads. (See Figures 18 and 19).

SERVICE INFORMATION:

PRNODL Switch (1989 Model)	5234022
PRNODL Switch (1990 Model)	5234393
Neutral Safety Switch (1989 Model)	3747361
Neutral Safety Switch (1990 Model)	5234319

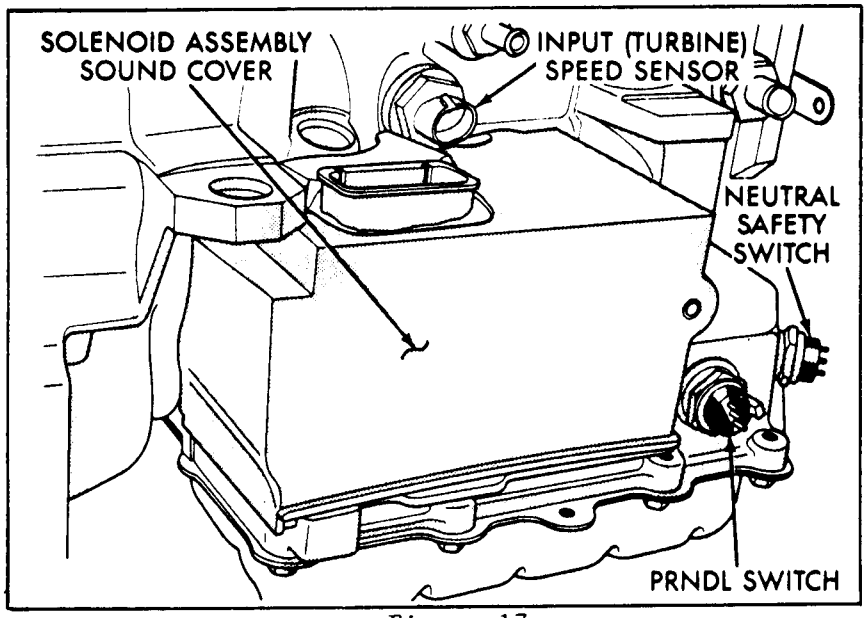

Figure 17

PRNODL SWITCH AND CONNECTOR

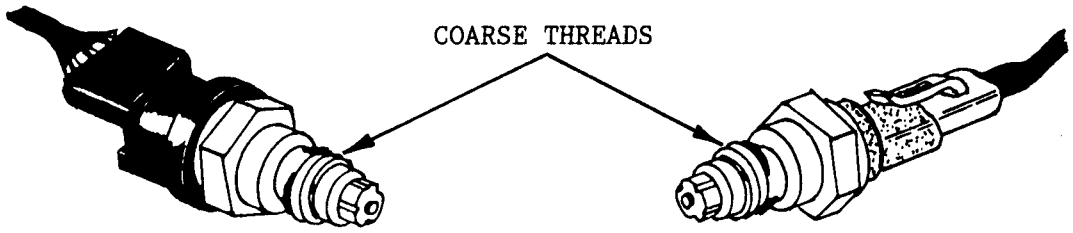

1989	1990
PART NUMBER	PART NUMBER
5234022	5234393

THESE PRNODL SWITCHES WILL NOT INTERCHANGE.

FIGURE 18

NEUTRAL SAFETY SWITCH AND CONNECTOR

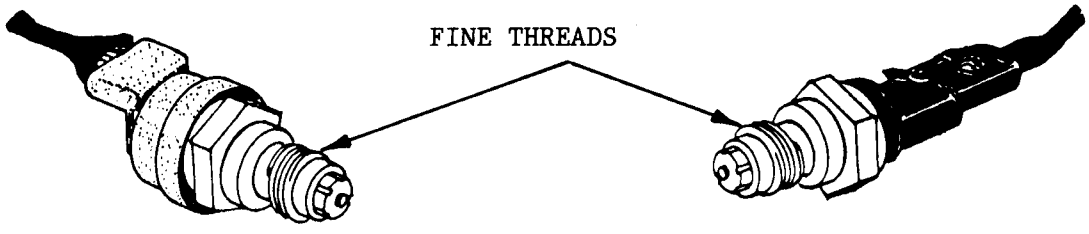

1989	1990
PART NUMBER	PART NUMBER
3747361	5234319

THESE NEUTRAL SWITCHES WILL NOT INTERCHANGE.

FIGURE 19

CHRYSLER A604

NEW OVERALL GEAR RATIOS

CHANGE: For 1990 there are 3 different overall gear ratios, depending on the model and engine size. They have added a new final drive ratio, and a new output/transfer gear ratio.

REASON: Greatly expanded model coverage.

PARTS AFFECTED:

(1) OUTPUT AND TRANSFER GEARS - There are now 2 different gear combinations, (New) 55T-58T, and (Previous) 59T-54T, depending on model and engine size. "Shot Peened" output and transfer gears are used in 3.3 litre, 2.5 litre turbo, and transaxles exported to Mexico. Refer to the chart in Figure 20.

(2) TRANSFER SHAFT AND RING GEAR - There are now 2 different final drive combinations, (New) 17T-59T, and (Previous) 16T-60T, depending on model and engine size. Refer to the chart in Figure 20.

INTERCHANGEABILITY:

NOT INTERCHANGEABLE. It will be imperative that you identify the transaxle properly. The transaxle is identified by the "Last 3 Digits" of the OEM part number, and is found on a sticker located on the rear gear cover (See Figure 21). Then refer to the chart in Figure 24 for proper applications.

If that sticker is missing, or painted over, there is another bar code decal located on the case directly above the PRNODL and neutral safety switches (See Figure 22).

The most permanent form of identification is an etching, in the case, located near the rear gear cover (See Figure 23). It may be necessary to remove the rear cover to see the part number, but if the vehicle has been in service for some time, this may be the only way to identify the unit.

Then refer to the chart in Figure 24, for proper applications.

SERVICE INFORMATION:

Output Shaft Gear, 55T	4377112
Output Shaft Gear, 55T (Shot Peened)	4531579
Output Shaft Gear, 59T	4377113
Output Shaft Gear, 59T (Shot Peened)	4531577
Transfer Shaft Gear, 58T	4412276
Transfer Shaft Gear, 58T (Shot Peened)	4531578
Transfer Shaft Gear, 54T	4412277
Transfer Shaft Gear, 54T (Shot Peened)	4531576
Transfer Shaft, 17T	4377126
Transfer Shaft, 16T	4377128
Ring Gear, 59T	4431655
Ring Gear, 60T	4431660

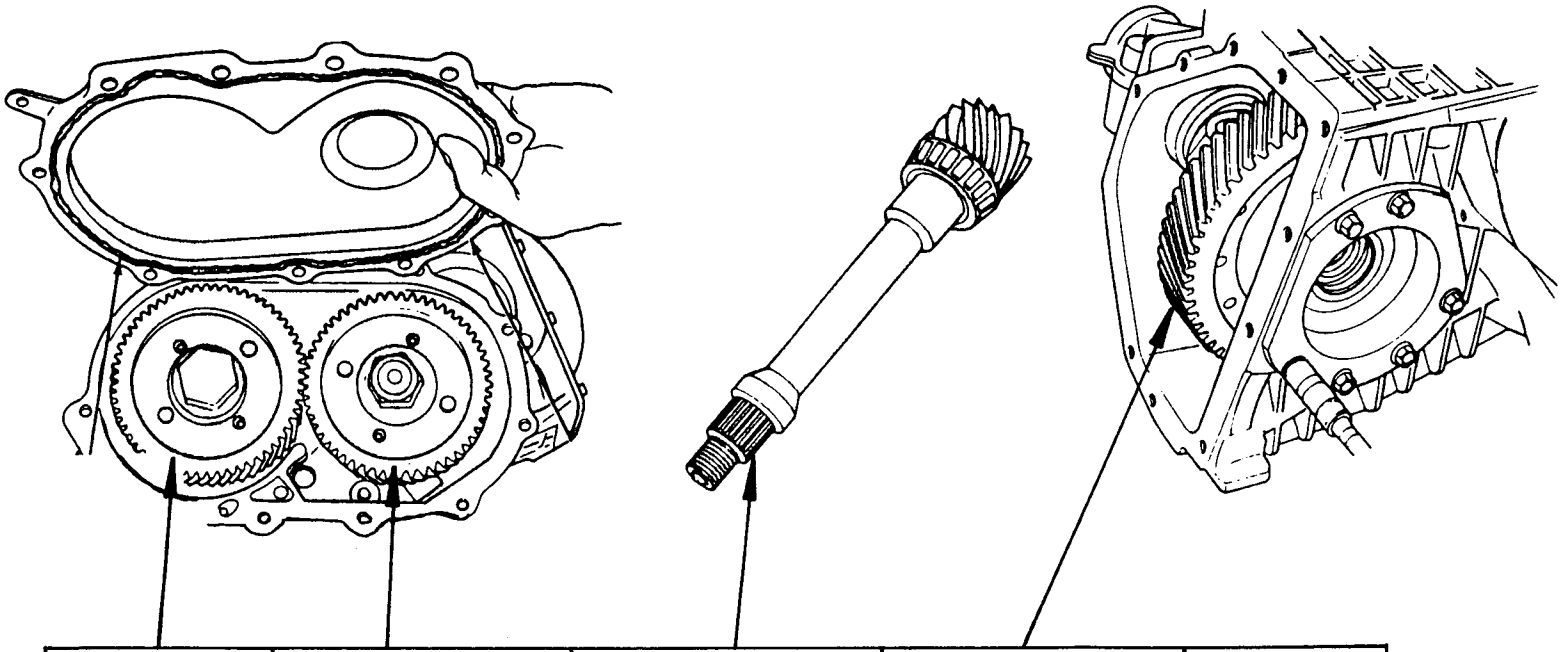

OUTPUT SHAFT GEAR	TRANSFER SHAFT GEAR	TRANSFER SHAFT	RING GEAR	OVERALL GEAR RATIO
55T 4377112	58T 4412276	17T 4377126	59T 4431655	2.52
55T 4377112 4531579 SP	58T 4412276 4531578 SP	16T 4377128	60T 4431660	2.72
59T 4377113 4531577 SP	54T 4412277 4531576 SP	16T 4377128	60T 4431660	2.36

Figure 20

SP = SHOT PEENED

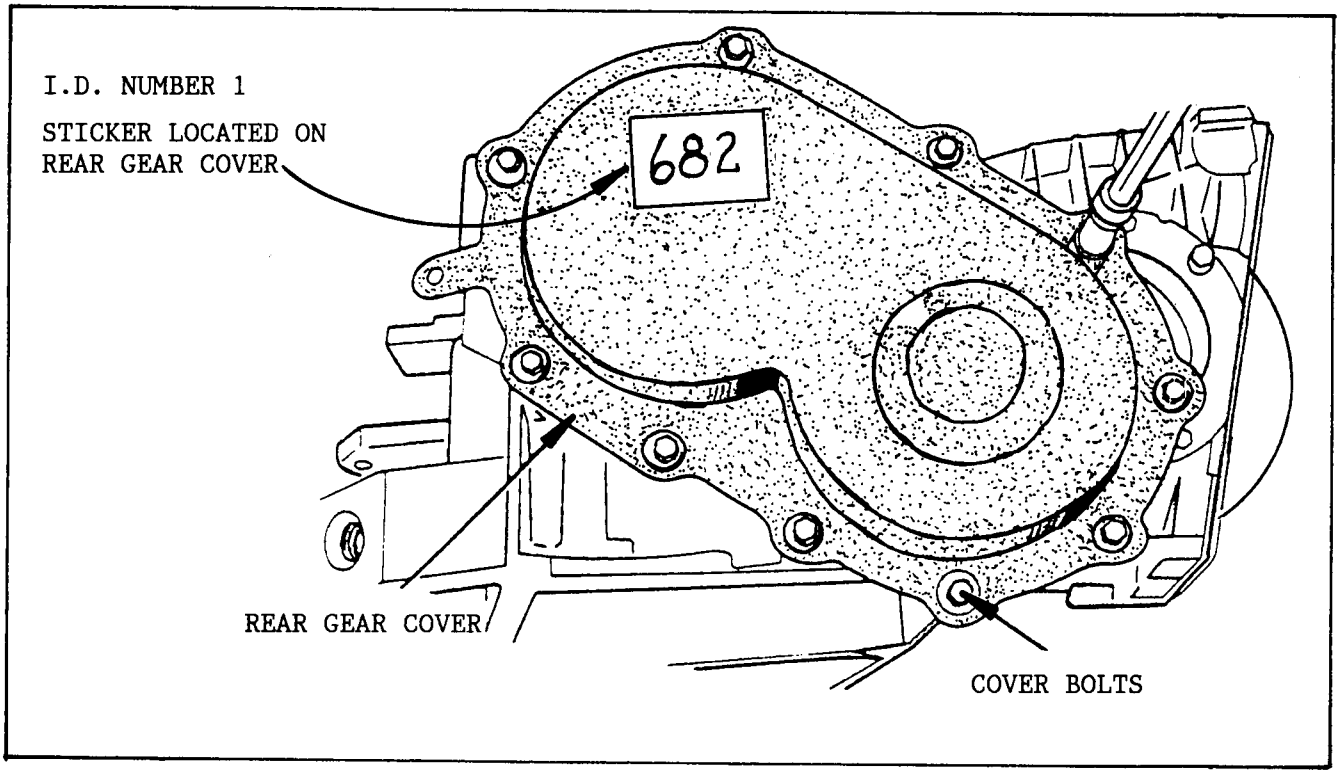

Figure 21

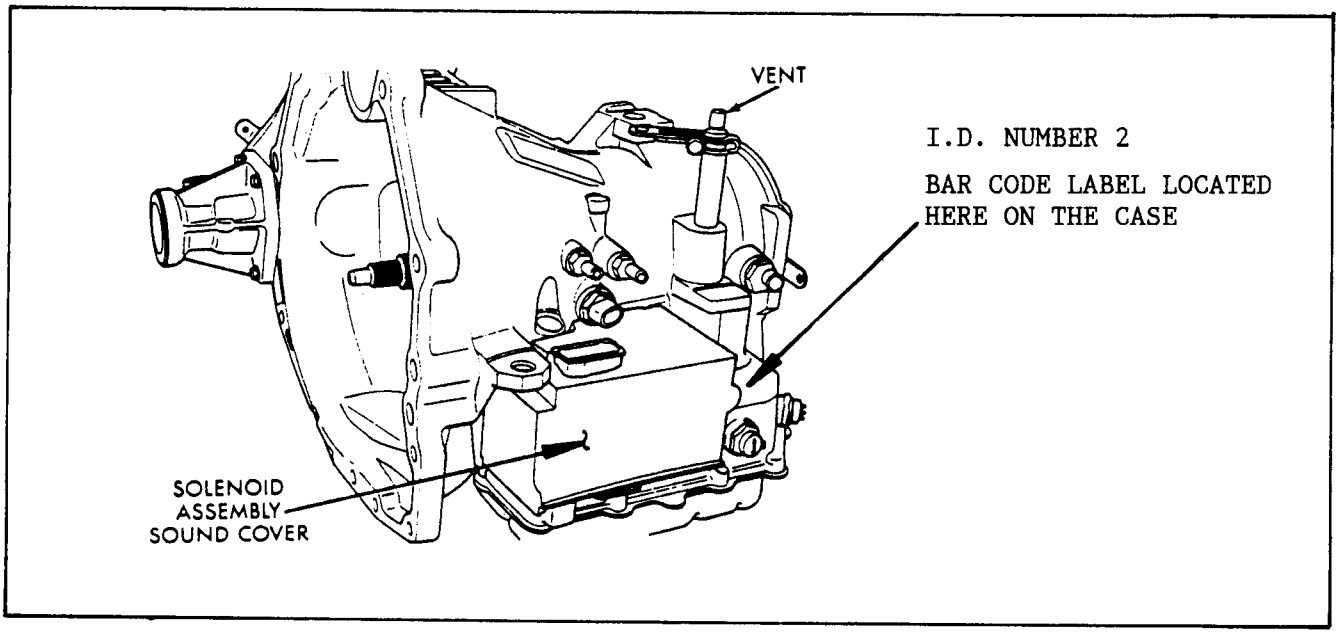

Figure 22

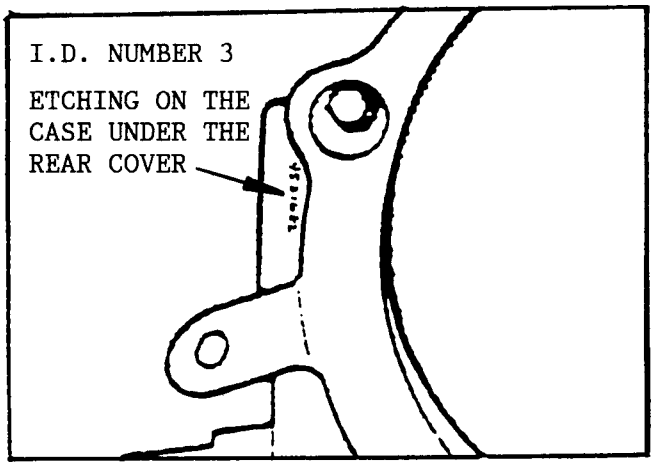

Figure 23

1989	1989 1/2	1990	1990 1/4	APPLICATION
4446 (659)	4531 (664)	4531 (551)	4531 (681)	3.0L 2.36 RATIO
----------	----------	4531 (630)	4531 (682)	3.3L 2.36 RATIO
----------	----------	4531 (553)	4531 (683)	2.5L 2.52 RATIO
----------	----------	4531 (554)	4531 (684)	2.5L 2.72 RATIO
----------	----------	4531 (555)	4531 (685)	2.5L TURBO 2.36 RATIO
----------	----------	4531 (635)	4531 (686)	2.5L TURBO 2.52 (MEX)

Figure 24

CHRYSLER A604

NEW (5TH DESIGN) TRANSAXLE CONTROLLER

CHANGE: As a running change for 1990, the A604 Transaxle Controller "Once Again" has been upgraded. The new #585 Controller entered production in late March of 1990.

Some owners may complain of a transaxle upshift/downshift hunting condition (3-4 Busyness) when the vehicle is fully loaded, driving up a grade, or into a headwind.

REASON: The new #585 Controller allows the torque converter clutch to unlock, instead of initiating a 4-3 downshift, during slight vehicle torque load changes.

PARTS AFFECTED:

(1) TRANSAXLE CONTROLLER - The controllers are identified by the last three digits of the OEM part number. The part number is on a sticker that is located on the bottom of the controller (See Figure 7).
The locations of the controllers will vary depending on the model of the vehicle (See Figure 7)

INTERCHANGEABILITY:

The new #585 Transaxle Controller will retro-fit back to ALL previous model A604 transaxles equipped with the earlier part numbers 5234623, 5234649, 5234678, or 4557120.

NOTE: When updating earlier controllers, do not Routinely replace the controller P/N 4557120 with P/N 4557585, Unless the customer has encountered upshift/downshift hunting conditions (3-4 Busyness) when the vehicle is fully loaded, driving up a grade, or into a headwind.
When updating controller P/N 5234623, 5234649, or 5234678, by all means use controller part number 4557585.

SERVICE INFORMATION:

Transaxle Controller (5th Design) 4557585

"A" BODY = ACCLAIM, SPIRIT, LEBARON
"C" BODY = DYNASTY, NEW YORKER LANDAU, SALON
"G" BODY = DAYTONA
"J" BODY = LEBARON COUPE, LEBARON CONVERTIBLE
"S" BODY = CARAVAN, GRAND CARAVAN, CARAVAN C/V, VOYAGER, GRAND VOYAGER, TOWN & COUNTRY
"Y" BODY = IMPERIAL, NEW YORKER 5TH AVENUE

CHRYSLER A604

NEW OVERDRIVE/REVERSE PISTON

CHANGE: A new Overdrive/Reverse Piston has been introduced for 1990 1/4 model transaxles, and features four reaction plate slots instead of eight slots (See Figure 25).

REASON: By using four slots, it leaves more material intact between the slots on the piston compared to the eight slot piston. This added material makes the piston stronger and more rigid.

PARTS AFFECTED:

(1) OVERDRIVE/REVERSE PISTON - The new Overdrive/Reverse Piston has four slots, for the pressure plate lugs, instead of the previous eight slots and can be identified visually (See Figure 25).

The inside diameter of the new pistons bottom corner also has a larger radius to accomodate a new 1990 1/4 Input Clutch Retainer dimensional change (See Figure 26).

(2) OVERDRIVE/REVERSE PRESSURE PLATE - The new Overdrive/Reverse Pressure Plate has only four lugs on the outside diameter, instead of the previous eight, and can be identified visually (See Figure 27).

(3) INPUT CLUTCH RETAINER - The new Input Clutch Retainer has a new radius on the outside diameter, to reduce the chance of damage to the lip seal during assembly (See Figure 28). This retainer has no identification marks, and is tough to identify visually. The OEM part number did not change.

INTERCHANGEABILITY:

The new Overdrive/Reverse Piston, and four lug pressure plate will retro-fit back to all previous models, if it is used as an assembly. The piston and pressure plate must BOTH be used in these instances.

The revised Input Clutch Retainer WILL NOT work with the previous style 8 lug overdrive/reverse piston. Since the part number did not change, to replace an input clutch retainer built in 1990, before the change to the 4 lug overdrive/reverse piston, you MUST also change to the 4 lug design piston and pressure plate.

SERVICE INFORMATION:

Overdrive/Reverse Piston, 4 Slot	4531492
Overdrive/Reverse Pressure Plate, 4 Lug	4531556
Service Package, 4 Lug (Includes Both of the Above)	5241063
Overdrive/Reverse Piston, 8 Slot	4431613
Overdrive/Reverse Pressure Plate, 8 Lug	4377191

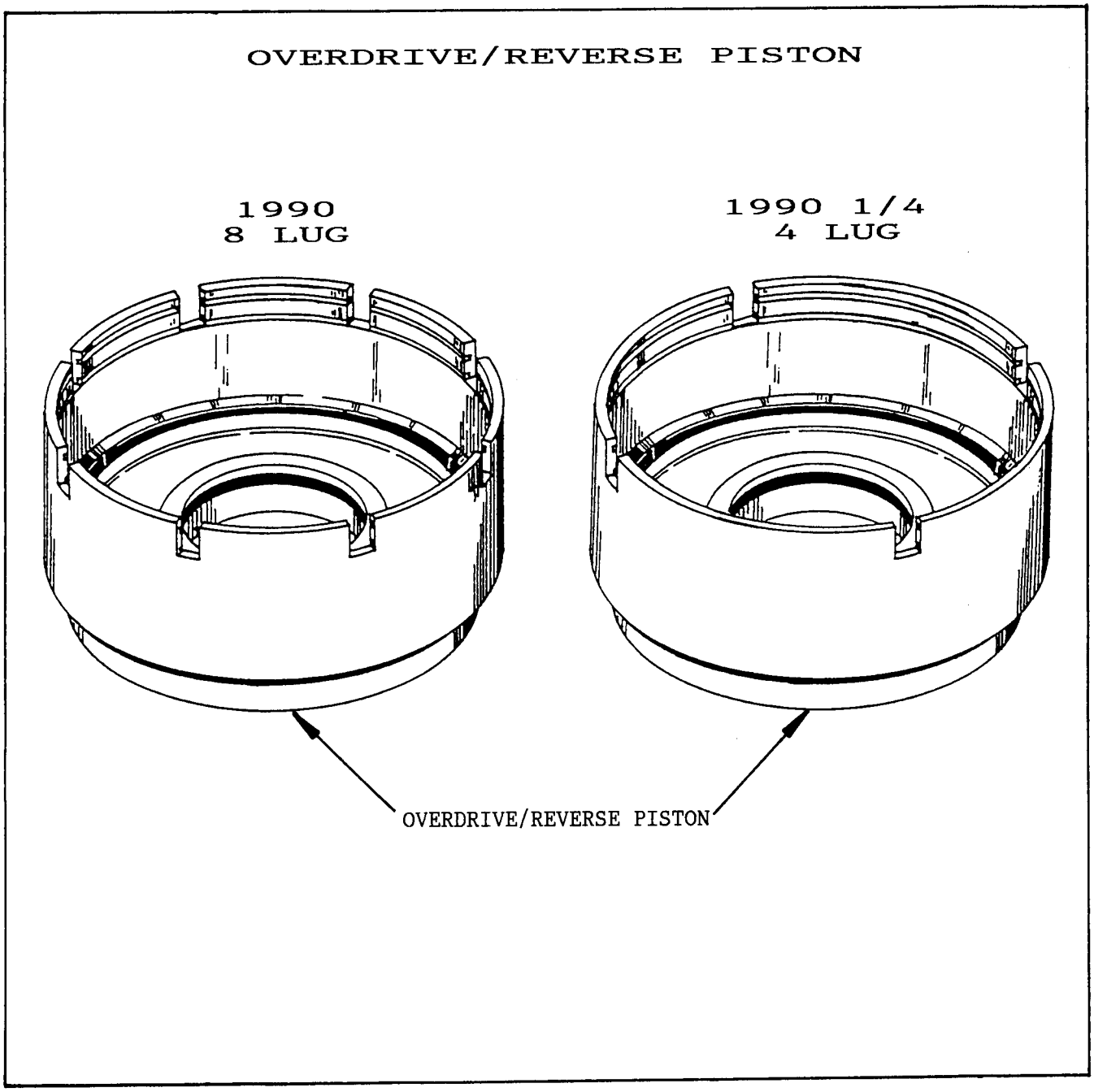
OVERDRIVE/REVERSE PISTON
1990
8 LUG
1990 1/4
4 LUG
OVERDRIVE/REVERSE PISTON

Figure 25

1990 1/4 OVERDRIVE/REVERSE PISTON WITH FOUR SLOTS

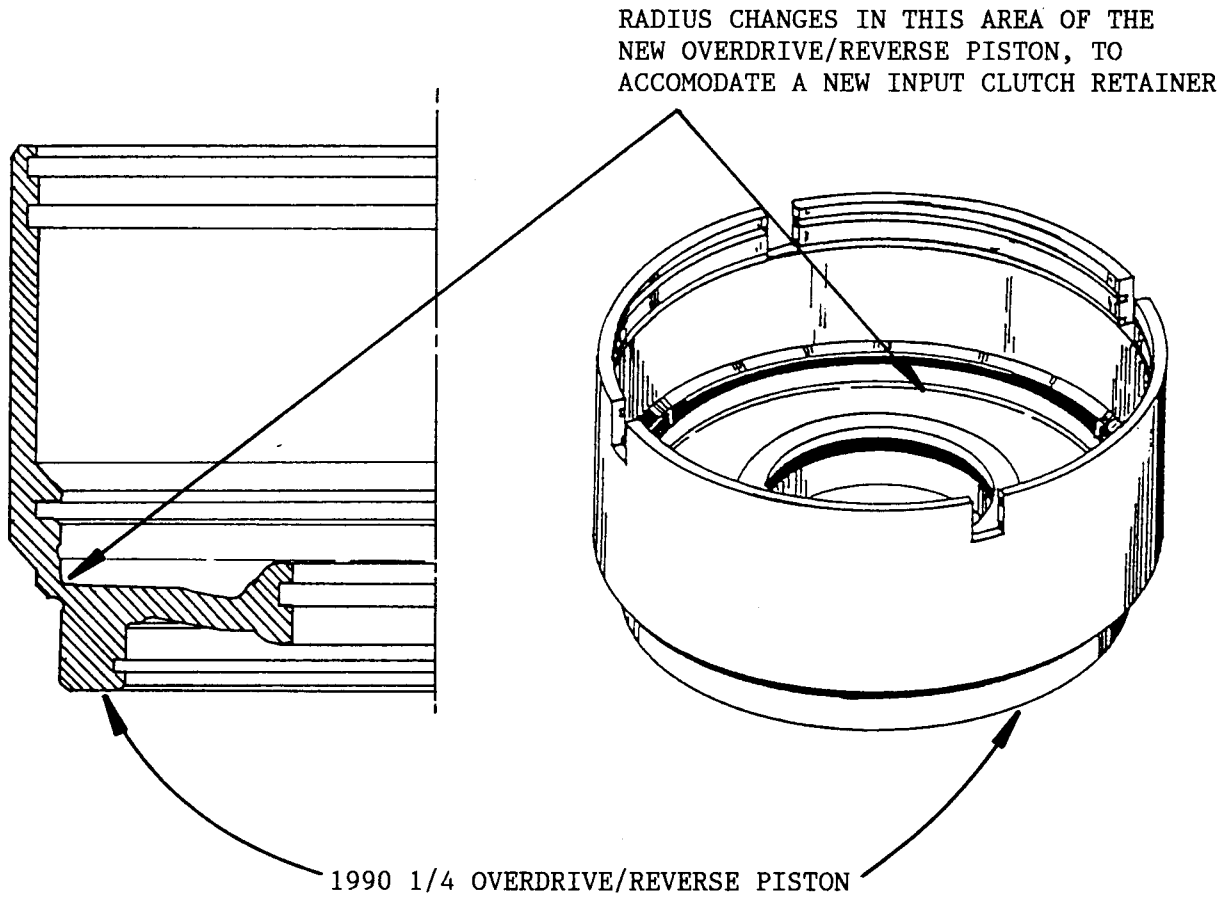

Figure 26

OVERDRIVE/REVERSE PRESSURE PLATE

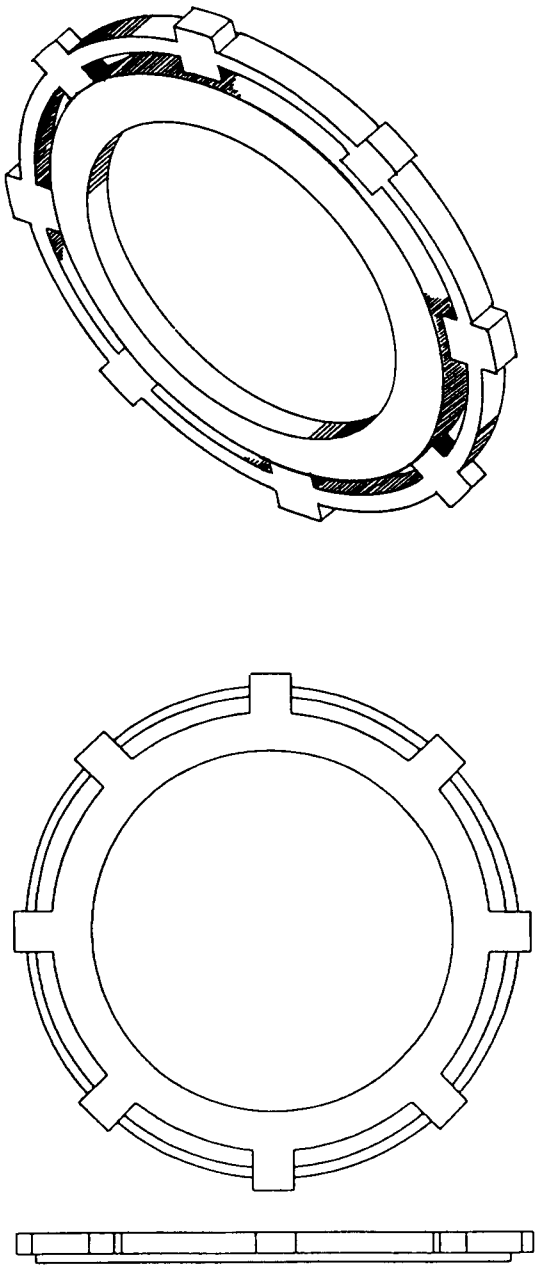

1990
8 LUG

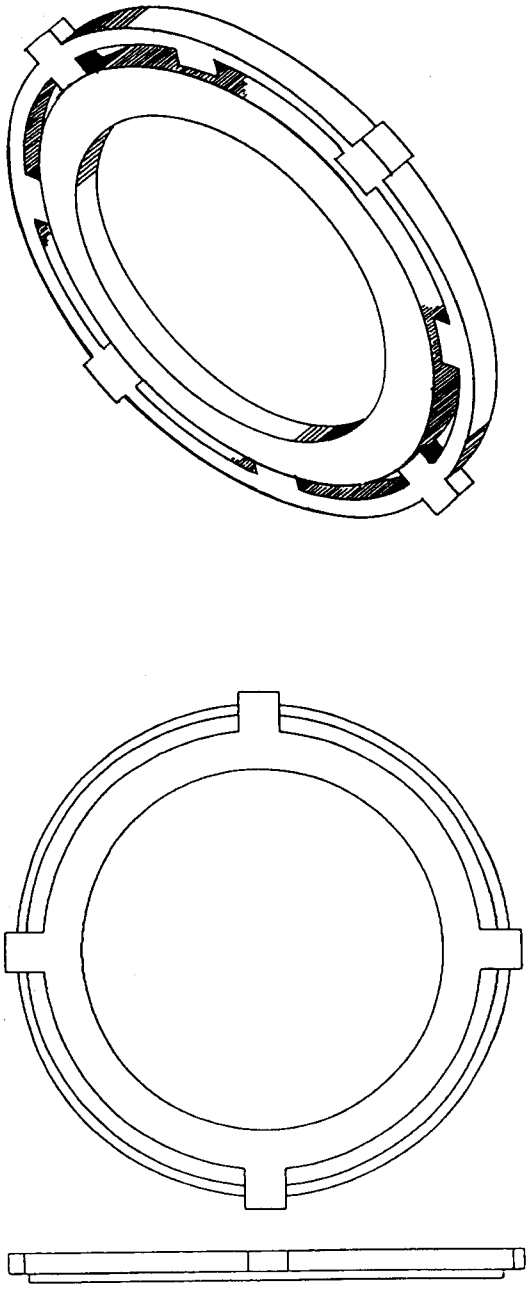

1990 1/4
4 LUG

FIGURE 27

1990 1/4 INPUT CLUTCH RETAINER

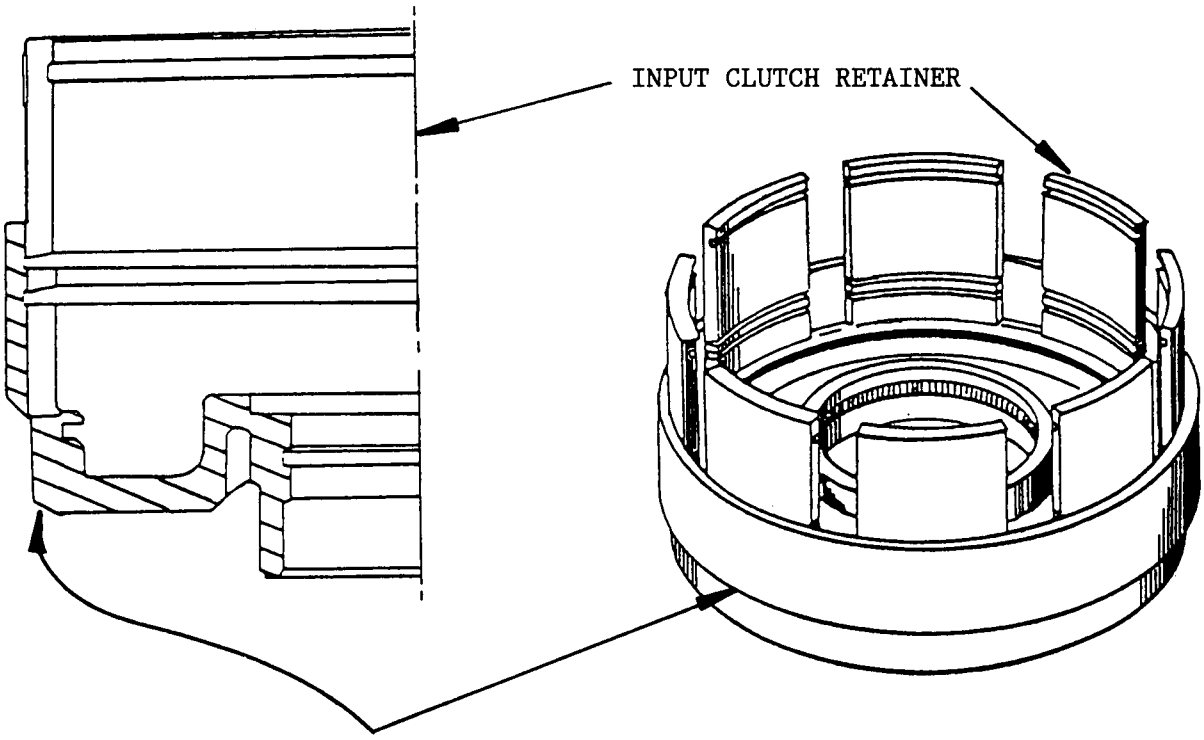

1990 1/4 INPUT CLUTCH RETAINER HAS A REVISED RADIUS, LOCATED HERE, ON THE OUTSIDE DIAMETER TO REDUCE THE CHANCE OF DAMAGE TO LIP SEAL.

Figure 28

CHRYSLER A604

1990 1/4 INPUT CLUTCH HUB

CHANGE: For all 1990 1/4 model transaxles, the Input Clutch Hub, and the color coded "O" rings have once again been upgraded.

REASON: Improved overdrive and reverse clutch durability.

PARTS AFFECTED:

(1) INPUT CLUTCH HUB - The "O" ring grooves on the Input Clutch Hub are cut deeper to accomodate the larger cross section color coded "O" rings (See Figure 29).

(2) FRONT INPUT CLUTCH HUB "O" RING - This "O" ring now has a larger, .103" cross section and is color coded BLUE for identification purposes. Remember that this is the 3rd change on this "O" ring. The original "O" ring was BLACK with a .070" cross section, the 2nd design "O" ring was ORANGE with a .070" cross section, and the 3rd design "O" ring is BLUE with a .103" cross section (See Figure 30).

(3) REAR INPUT CLUTCH HUB "O" RING - This "O" ring now has a larger, .103" cross section and is color coded RED for identification purposes. Remember that this is the 3rd change on this "O" ring. The original "O" ring was BLACK with a .070" cross section, the 2nd design "O" ring was GREEN with a .070" cross section, and the 3rd design "O" ring is RED with a .103" cross section (See Figure 31).

INTERCHANGEABILITY:

You CANNOT interchange the 1990 1/4 Input Clutch Hub "O" Rings (BLUE and RED) with the 89-90 "O" rings (ORANGE and GREEN), nor with the original (BLACK) "O" rings.

The new Input Clutch Hub with the deeper "O" ring grooves, and the BLUE and RED "O" rings will retro-fit back to all previous models, but you MUST also use the 1990 input clutch retainer as well.

SERVICE INFORMATION:

Input Clutch Hub, 90 1/4 (Deeper Grooves)	4531637
Input Clutch Hub, 1990 (Shallow Grooves)	4531655
Input Clutch Retainer, 1990	4505623
Front "O" Ring, BLACK .070" (Original)	6501574
Rear "O" Ring, BLACK .070" (Original)	6501548
Front "O" Ring, ORANGE .070" (89-90)	6502272
Rear "O" Ring, GREEN .070" (89-90)	6502270
Front "O" Ring, BLUE .103" (90 1/4)	6502271
Rear "O" Ring, RED .103" (90 1/4)	6502269

1990 1/4 INPUT CLUTCH HUB

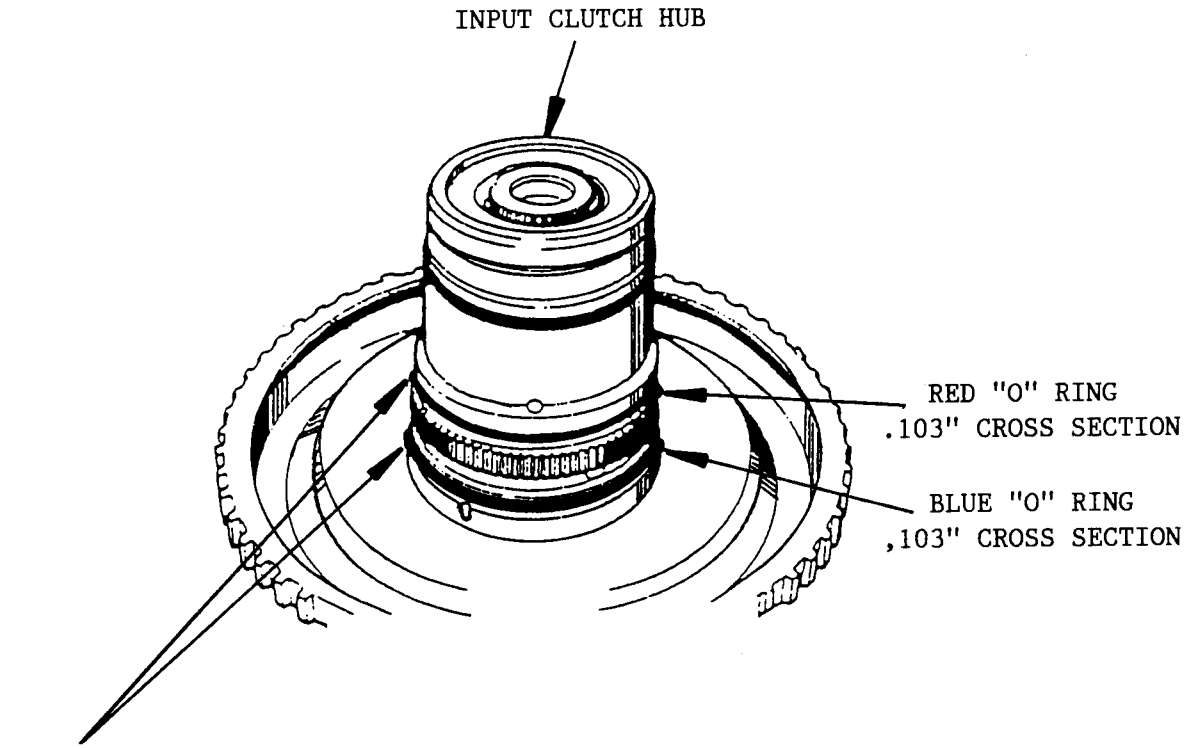

Figure 29

FRONT INPUT CLUTCH HUB "O" RING

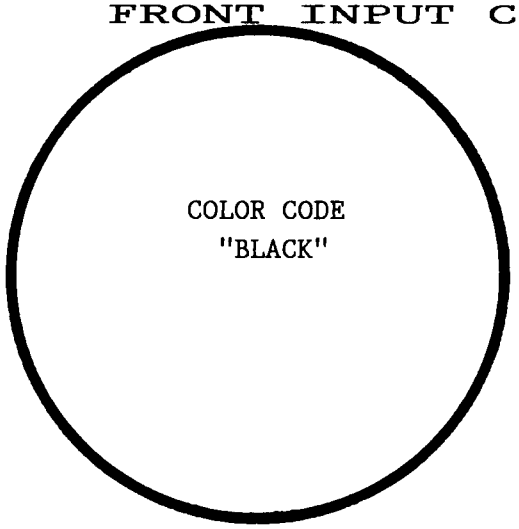

COLOR CODE
"BLACK"

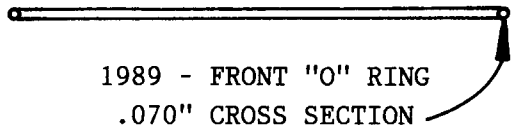

1989 - FRONT "O" RING
.070" CROSS SECTION
PART NUMBER 6501574

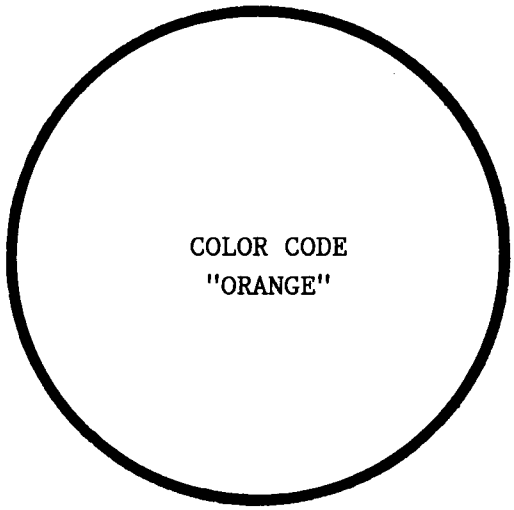

COLOR CODE
"ORANGE"

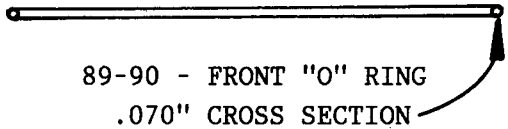

89-90 - FRONT "O" RING
.070" CROSS SECTION
PART NUMBER 6502272

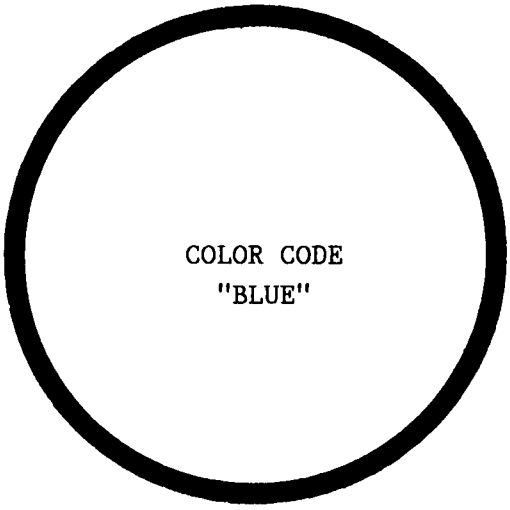

COLOR CODE
"BLUE"

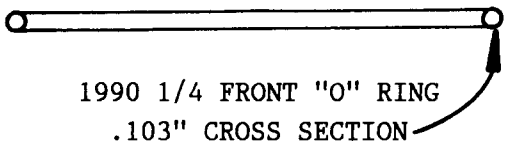

1990 1/4 FRONT "O" RING
.103" CROSS SECTION
PART NUMBER 6502271

Figure 30

REAR INPUT CLUTCH HUB "O" RING

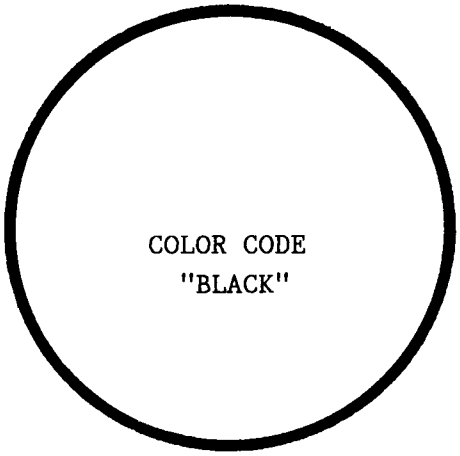

COLOR CODE
"BLACK"

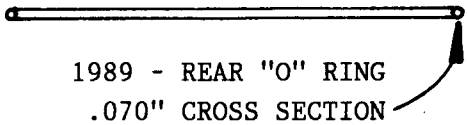

1989 - REAR "O" RING
.070" CROSS SECTION
PART NUMBER 6501548

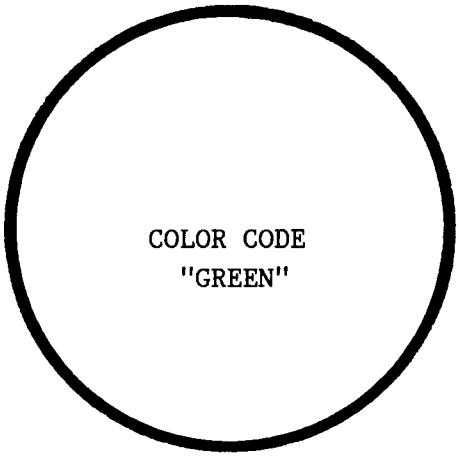

COLOR CODE
"GREEN"

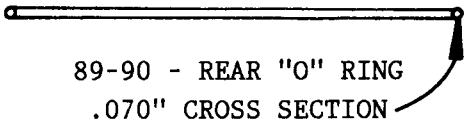

89-90 - REAR "O" RING
.070" CROSS SECTION
PART NUMBER 6502270

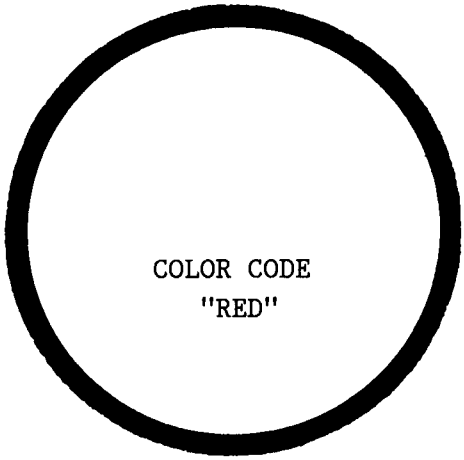

COLOR CODE
"RED"

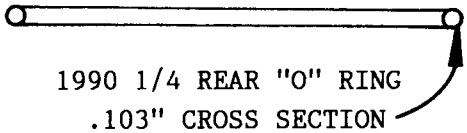

1990 1/4 REAR "O" RING
.103" CROSS SECTION
PART NUMBER 6502269

Figure 31

CHRYSLER A604

ASSEMBLY OF 2/4 AND L/R CLUTCH PACKS

Extra attention is needed when assembling the Low/Reverse clutch pack and the Two/Four clutch pack into the case, as both of the clutch packs are very similar, but are not compatable with one another.

THINGS TO WATCH FOR:

(1) Both clutch packs, on the steel plates, have the same tooth profile, but the thicknesses are different (See Figure 32).
   A. 2/4 STEEL PLATE THICKNESS IS .100" (4 Required).
   B. L/R STEEL PLATE THICKNESS IS .070" (5 Required).

(2) Both clutch packs, on the lined plates, have the same tooth count and the same lining, but the thicknesses are different (See Figure 32).
   A. 2/4 LINED PLATE THICKNESS IS .085" (4 Required).
   B. L/R LINED PLATE THICKNESS IS .070" (5 Required).

There are 5 lined plates and 5 steel plates in the Low/Reverse clutch pack. There are 4 lined plates and 4 steel plates in the Two/Four clutch pack. There is also a common pressure plate used between the clutch packs.

We have provided you with the proper clutch stack up for these clutch packs, to assist you with proper assembly for the 2/4 and L/R clutch packs. Refer to Figure 33 for proper assembly procedures.

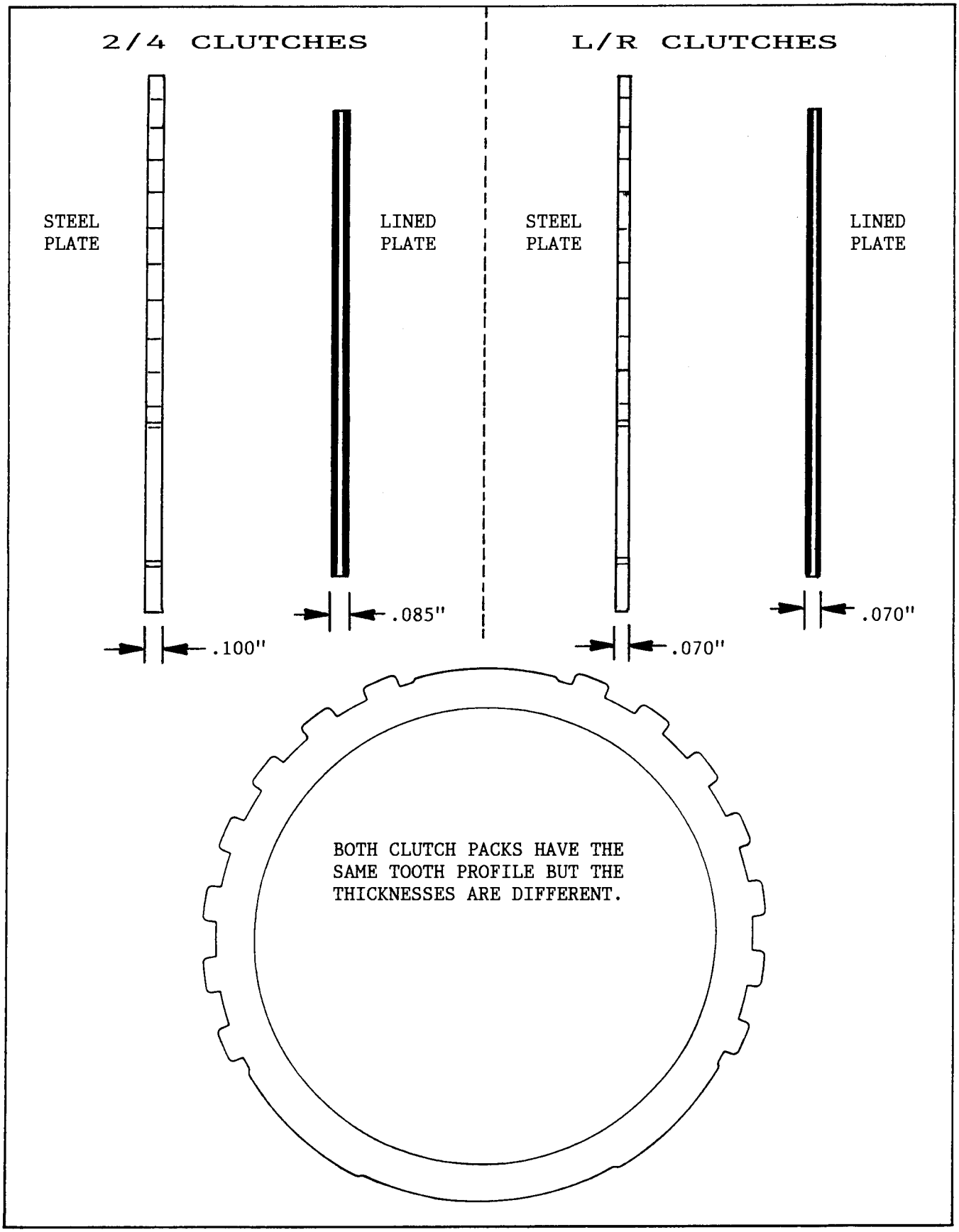
2/4 CLUTCHES
L/R CLUTCHES
STEEL PLATE
LINED PLATE
STEEL PLATE
LINED PLATE
.100"
.085"
.070"
.070"
BOTH CLUTCH PACKS HAVE THE SAME TOOTH PROFILE BUT THE THICKNESSES ARE DIFFERENT.

Figure 32

TWO/FOUR AND LOW/REVERSE CLUTCH PLATES

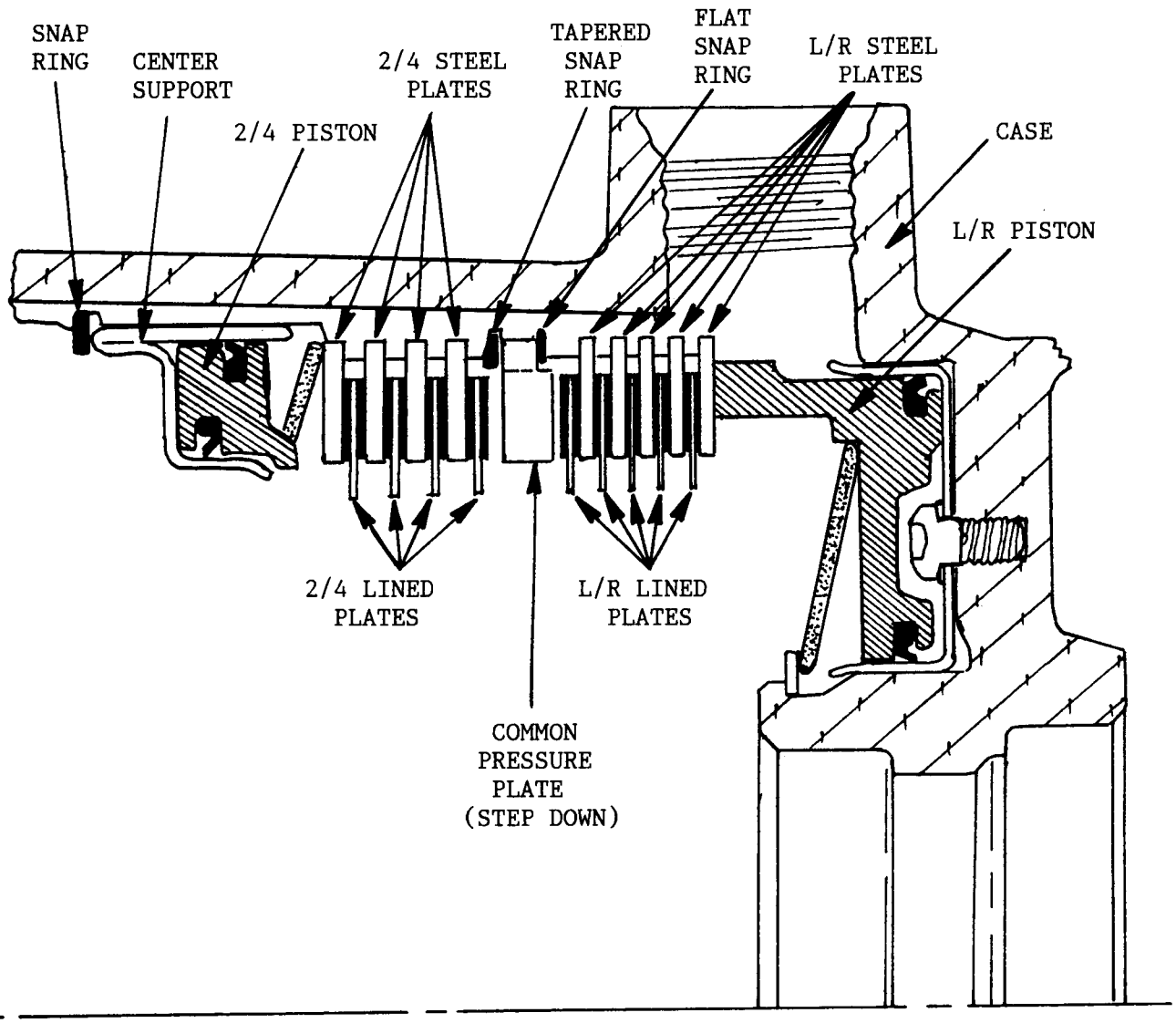

LOW/REVERSE CLUTCH PACK TAKES 5 STEEL PLATES (.070") AND 5 LINED PLATES (.070")

TWO/FOUR CLUTCH PACK TAKES 4 STEEL PLATES (.100") AND 4 LINED PLATES (.085")

LOW/REVERSE CLUTCH PACK CLEARANCE IS .042" TO .065" AND IS SET WITH THE COMMON SELECTIVE PRESSURE PLATE, AVAILABLE IN SEVEN THICKNESSES.

TWO/FOUR CLUTCH PACK CLEARANCE IS .030" TO .104" AND IF NOT WITHIN SPEC, THE CLUTCH IS NOT ASSEMBLED PROPERLY.

THERE IS NO ADJUSTMENT FOR THE TWO/FOUR CLUTCH CLEARANCE.

Figure 33

CHRYSLER A604

PREMATURE FAILURE OF O.D. AND REVERSE CLUTCHES

COMPLAINT: Premature failure of the overdrive and the reverse clutch plates, and all lip seals and "O" rings are good.

CAUSE: The cause may be an orifice and screen assembly blown out of the overdrive/reverse piston (See Figure 34).

CORRECTION: Replace the Orifice/Screen Assembly with a new one, available under OEM part number 4531903, and stake the new assembly in place (See Figure 34). They were not all staked in place at the factory.

SERVICE INFORMATION:

Overdrive/Reverse Piston Orifice/Screen Assy 4531903

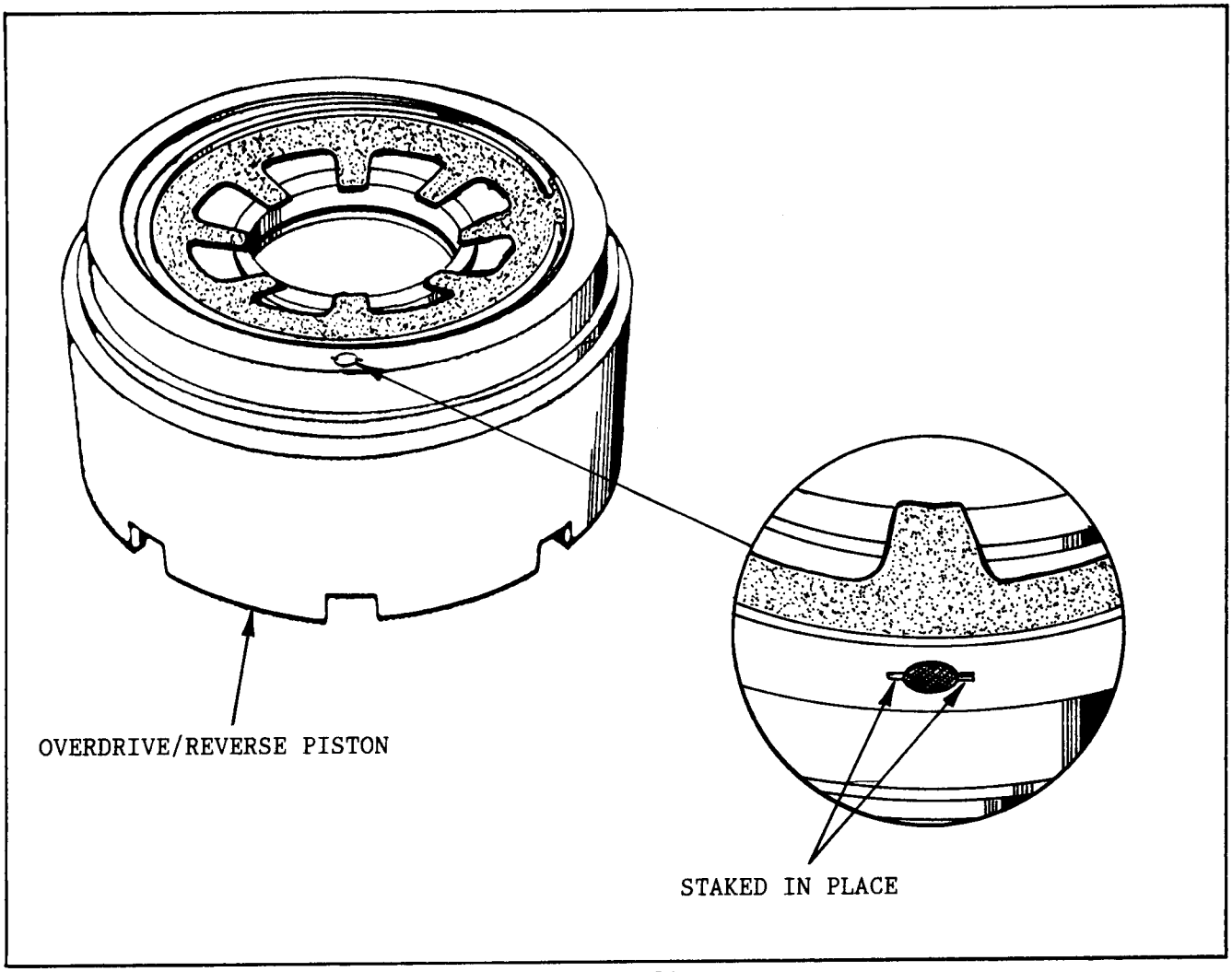

Figure 34

CHRYSLER A604

DIAGNOSTIC FAULT CODE CHART

FAULT	CODE	LIMP-IN
INTERNAL A604 CONTROLLER	11	YES
BATTERY WAS DISCONNECTED	12	NO
INTERNAL A604 CONTROLLER	13	YES
EATX RELAY OUTPUT ALWAYS ON	14	YES
EATX RELAY OUTPUT ALWAYS OFF	15	YES
INTERNAL A604 CONTROLLER	16	YES
INTERNAL A604 CONTROLLER	17	YES
ENGINE SPEED SIGNAL CIRCUIT	18	YES
BUS COMUNICATION WITH ENGINE CONTROLLER	19	NO
SWITCHED BATTERY	20	YES
OD PRESSURE SWITCH CIRCUIT	21	YES
2/4 PRESSURE SWITCH CIRCUIT	22	YES
2/4 AND OD PRESSURE SWITCH CIRCUITS	23	YES
L/R PRESSURE SWITCH CIRCUIT	24	YES
L/R AND OD PRESSURE SWITCH CIRCUITS	25	YES
L/R AND 2/4 PRESSURE SWITCH CIRCUITS	26	YES
ALL PRESSURE SWITCH CIRCUITS	27	YES
CHECK PRNODL SIGNAL	28	NO
THROTTLE POSITION SIGNAL	29	NO
OD HYDRAULIC PRESSURE SWITCH	31	YES
2/4 HYDRAULIC PRESSURE SWITCH	32	YES
OD AND 2/4 HYDRAULIC PRESSURE SWITCH	33	YES
FAULT IMMEDIATELY AFTER SHIFT	36	YES
SOLENOID SWITCH VALVE (STUCK IN LU POSITION)	37	NO
LOCKUP CONTROL	38	NO
GEAR RATIO ERROR	39	YES
L/R SOLENOID CIRCUIT ERROR	41	YES
2/4 SOLENOID CIRCUIT ERROR	42	YES
OD SOLENOID CIRCUIT ERROR	43	YES
UD SOLENOID CIRCUIT ERROR	44	YES
INTERNAL A604 CONTROLLER	45	NO
3-4 SHIFT ABORT	46	NO
SOLENOID SWITCH VALVE (STUCK IN L/R POSITION)	47*	YES
GEAR RATIO ERROR IN REVERSE	50*	YES
GEAR RATIO ERROR IN 1ST	51*	YES
GEAR RATIO ERROR IN 2ND	52*	YES
GEAR RATIO ERROR IN 3RD	53*	YES
GEAR RATIO ERROR IN 4TH	54*	YES
TURBINE SENSOR ERROR	56*	YES
OUTPUT SENSOR ERROR	57*	YES
SENSORS GROUND ERROR	58*	YES
INADEQUATE L/R ELEMENT VOLUME	60*	NO
INADEQUATE 2/4 ELEMENT VOLUME	61*	NO
INADEQUATE OD ELEMENT VOLUME	62*	NO
INADEQUATE UD ELEMENT VOLUME	63*	NO

*DENOTES NEW FOR 1991

Code 11:	Internal A-604 Controller (Watchdog Circuit Test)

Background: The internal Watchdog (WD) circuit continuously monitors the Central Processing Unit (CPU) for normal operation and provides a transaxle limp-in when it detects a problem in the CPU. On the other hand the CPU periodically TEST's the WD's ability to provide this shutdown function.

Conditions To Set Code: Watchdog circuit test fails.

When Checked: After a reset (ignition key turned to the RUN position or after cranking engine), and periodically thereafter.

Effect: Transaxle limp-in (2nd gear).

Probable Causes: Internal controller failure.

Code 12:	Battery Was Disconnected or an open occurs in the power line. It exists to provide reference information only.

Background: Keep alive memory is used to maintain some learned values. When the battery is disconnected, this memory is lost and, when battery is re-connected, the loss of memory will be detected by the controller. The code will be set and the learned values will be initialized to known constants.

Conditions To Set Code: Battery disconnected, first installation, or open power line.

When Checked: After a reset (ignition key turned to the RUN position or after cranking engine).

Effect: Setting the code has no effect except for reinitialization of some parameters. In other words the transaxle would have to relearn shift characteristics. If the controller looses its power supply while the vehicle is being driven, all electronic control features are lost, and the transaxle would be operating as if it was in the limp-in mode of operation.

Probable Causes: Battery disconnected or open circuits in power line.

Code 13:	Internal A-604 Controller (Watchdog Circuit Shutdown)

Background: The internal Watchdog (WD) circuit continuously monitors the CPU. It provides a shutdown function when it detects a problem in the CPU.

Conditions To Set Code: A problem with the microprocessor detected by WD.

When Checked: After a reset (ignition key turned to the RUN position or after cranking engine), and periodically thereafter.

Effect: Transaxle limp-in (2nd gear).

Probable Causes: Internal controller failure.

Code 14:	EATX Relay Always On

Background: The EATX relay is used to supply power to the solenoid pack (when in normal operating mode) and to turn off power (when the transaxle has been placed into the "limp-in" mode of operation). The relay output (which supplies power to the solenoid pack) is fed back to the controller through pins 16 and 17. It is referred to as SWITCHED BATTERY.

After a controller reset (ignition key turned to the RUN position or after cranking engine), the controller energizes the relay. But before this is done, the controller verifies that the relay contacts are open by checking for no voltage on Switched battery (ie. relay output).

Conditions To Set Code: Relay output (Switched Battery) has more than 3 volts when relay is not energized by controller.

When Checked: After a reset (ignition key turned to the RUN position or after cranking engine), and after a "power-down" from turning ignition off.

Effect: Transaxle limp-in (2nd gear).

Probable Causes:
- Relay failure (Welded contacts).
- Short to battery in SA1 circuit.
- Short to battery in SF1 circuit.
- 60-way connector problem (cavities 15, 16, and 17).
- Internal controller failure.

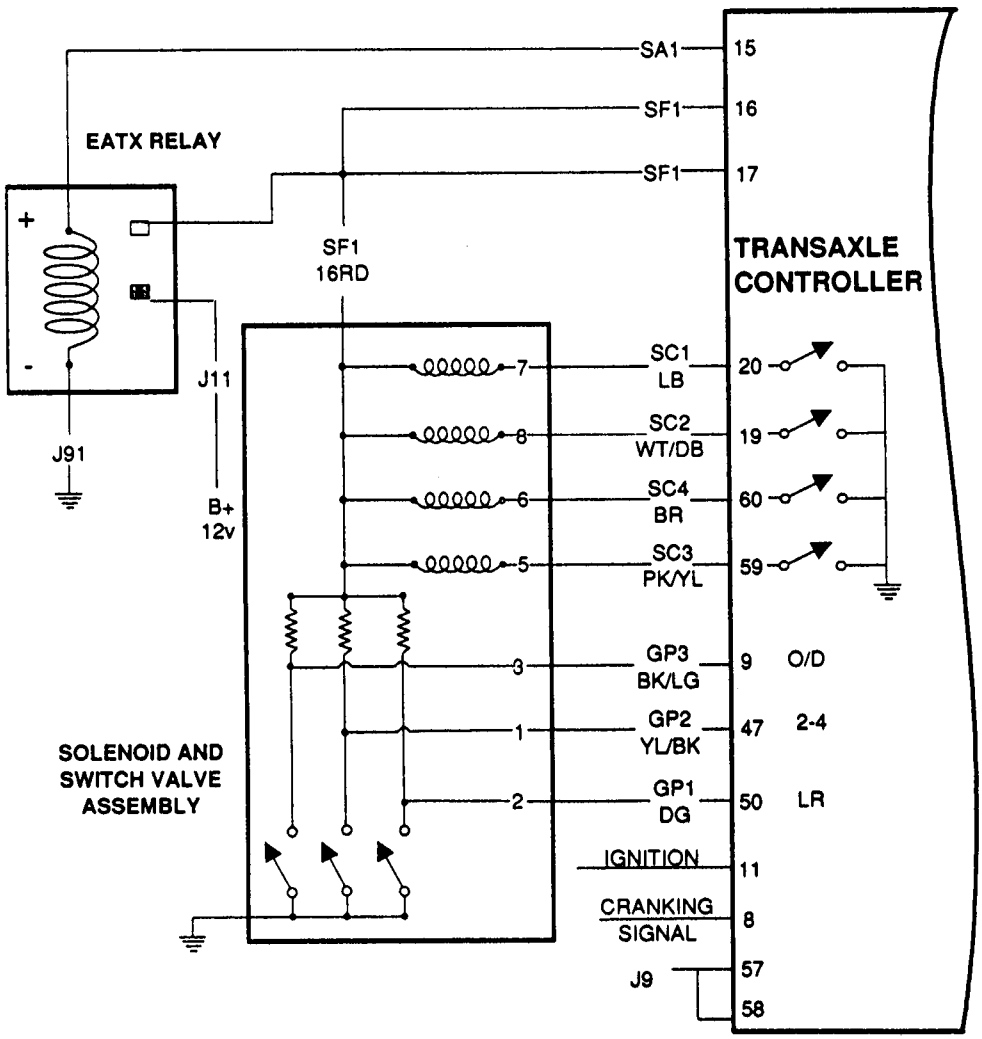
EATX RELAY
+
-
J91
J11
B+
12v
SF1
16RD
SA1
SF1
SF1
15
16
17
TRANSAXLE
CONTROLLER
SC1
LB
20
SC2
WT/DB
19
SC4
BR
60
SC3
PK/YL
59
7
8
6
5
GP3
BK/LG
9
O/D
GP2
YL/BK
47
2-4
GP1
DG
50
LR
3
1
2
SOLENOID AND
SWITCH VALVE
ASSEMBLY
IGNITION
11
CRANKING
SIGNAL
8
J9
57
58

Code 15:	EATX Relay Always Off

Background: The EATX relay is used to supply power to the solenoid pack (when in normal operating mode) and to turn off power (when the transaxle is in "limp-in" mode). The relay output (which supplies power to the solenoid pack) is fed back to the controller through pins 16 and 17. It is referred to as SWITCHED BATTERY.

After a controller reset (ignition key turned to the RUN position or when cranking engine), the controller energizes the relay. Then the controller verifies that the relay contacts are closed by checking for voltage on Switched battery (ie. relay output).

Conditions To Set Code: Relay output (Switched Battery) has less than 3 volts when relay is energized by controller.

When Checked: After a reset (ignition key turned to the RUN position or after cranking engine).

Effect: Transaxle limp-in (2nd gear).

Probable Causes:

- Relay failure (Open contacts).
- Short to ground in SA1 circuit.
- Open SA1 circuit between relay and controller.
- Open SF1 circuit between relay and controller.
- Open J91 circuit from relay to ground.
- Open J11 circuit from relay to splice.
- 60-way connector problem (cavities 15, 16, and 17).
- Internal controller failure.

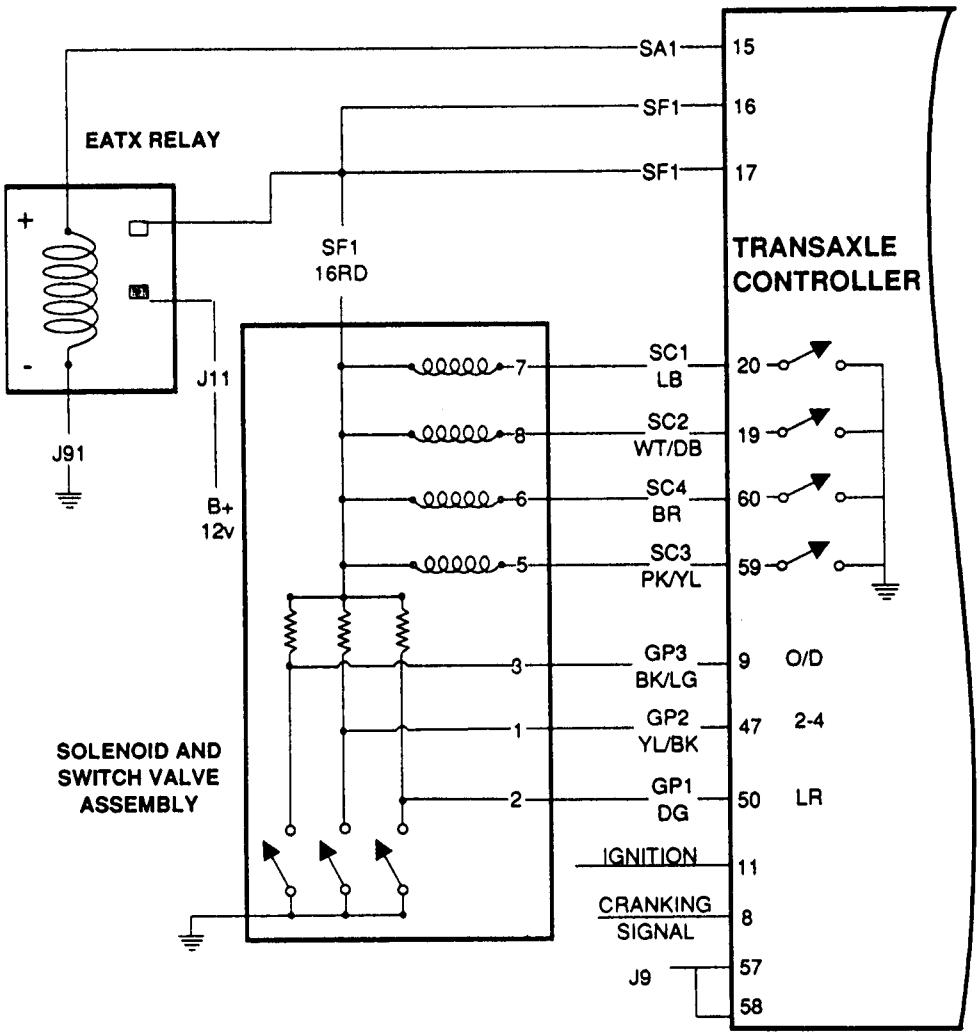
SA1
15
SF1
16
SF1
17
EATX RELAY
+
-
J91
J11
B+
12v
SF1
16RD
TRANSAXLE
CONTROLLER
7
SC1
LB
20
8
SC2
WT/DB
19
6
SC4
BR
60
5
SC3
PK/YL
59
3
GP3
BK/LG
9
O/D
1
GP2
YL/BK
47
2-4
2
GP1
DG
50
LR
SOLENOID AND
SWITCH VALVE
ASSEMBLY
IGNITION
11
CRANKING
SIGNAL
8
J9
57
58

Code 16:	Internal A-604 Control (ROM Check failure)

Background: When the controller is reset, the CPU checks the integrity of the program memory (ROM). It adds all used bytes in the program memory. The sum should be the same as a known constant (stored in program memory).

Conditions To Set Code: ROM checksum does not match a known constant.

When Checked: After a reset (ignition key turned to the RUN position or after cranking engine).

Effect: Transaxle limp-in (2nd Gear).

Probable Causes: Internal controller failure.

Code 17:	Internal A-604 Controller (RAM Check Failure)

Background: When the controller is reset, the CPU checks the integrity of each RAM location by writing to it and reading back from it. The read value should be the same as value written.

Conditions To Set Code: Data read from at least one RAM location does not match data written to it.

When Checked: After a reset (ignition key turned to the RUN position or after cranking engine).

Effect: Transaxle limp-in (2nd gear).

Probable Causes: Internal controller failure.

Code 18:	Engine Speed Signal Circuit

Background: EATX uses a distributer signal to calculate the engine rpm (which could be zero when the ignition key is in the RUN position and engine is not running). When the calculated engine rpm is almost zero, it is compared to the engine speed received from the engine controller over the C²D bus to confirm that the engine is actually not running. Otherwise this means a problem with the engine speed signal circuit.

Conditions To Set Code:
- Calculated engine speed is less than a threshold rpm.
- C²D bus is operational.
- Engine speed received from the engine controller over the C²D bus is more than the threshold rpm.

NOTE: If C²D was not operational, code will not be set.

When Checked: Continuously.

Effect: Transaxle limp-in (2nd gear).

Probable Causes:
- Open/short in N7 circuit (distributor pick up signal).
- Defective sensor in distributor.
- 60-way connector problem (cavity 45).
- Internal controller failure.

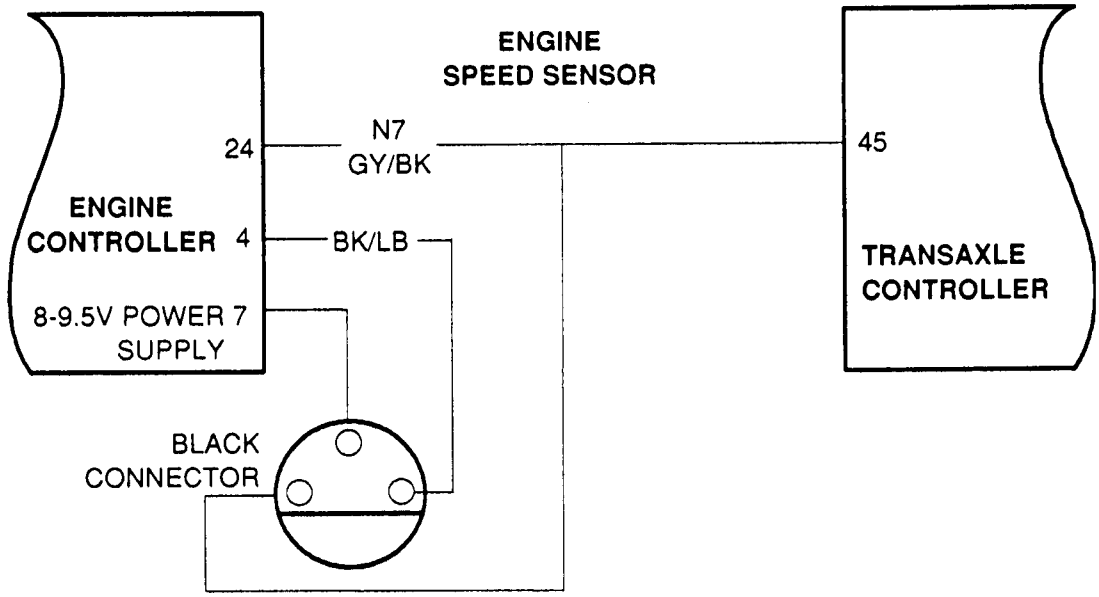

Code 19:	C²D Bus Communication

Background: EATX communicates with the engine controller over the C²D bus. Engine RPM, Engine and Ambient Temperature are among the information received by EATX. The controller continuously monitors the bus activity and receives the messages it needs.

Conditions To Set Code: No activity on the C²D bus.

When Checked: Continuously.

Effect:
- No limp-in.
- Due to loss of temperature information:
  a. Delayed 3-4 shift and early 4-3 shift for few minutes after engine is started.
  b. No lock up operations for a few minutes after engine is started.

NOTE: When the C²D bus becomes operational again, EATX will resume receiving the needed messages. However, the code will remain set.

Probable Causes:
- Open MX1 or MX2 circuits between EATX and engine controller.
- Shorted MX1 or MX2 circuit.
- C²D bus biasing problem (bus has to be properly biased by one of the vehicle's controllers).
- Engine controller C²D problem circuit.
- EATX controller C²D circuit problem.

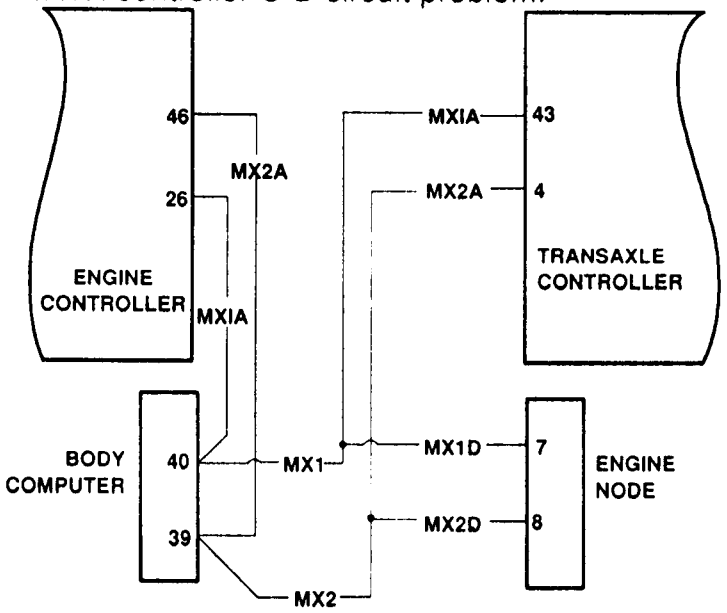

EXAMPLE: C2D BUS CIRCUIT C AND Y BODIES

Code 20:	Switched Battery

Background: The EATX relay is used to supply power to the solenoid pack (when in normal operating mode) and to turn off power (when the transaxle is in "limp-in" mode). The relay output (which supplies power to the solenoid pack) is fed back to the controller through pins 16 and 17. It is referred to as SWITCHED BATTERY.

After a controller reset (ignition key turned to the RUN position or after cranking engine), the controller energizes the relay. But before this is done, the controller verifies that the relay contacts are open by checking for no voltage on Switched battery (ie. relay output). After switched battery is verified for no voltage, the voltage of the solenoid pack pressure switches is also checked. Since the solenoid pack is not powered up, there should be no voltage on any of the pressure switches. Otherwise there is a problem on the switched battery.

Conditions To Set Code: A voltage is detected on any of the pressure switches before the relay is energized.

When Checked: After a reset (ignition key turned to the RUN position or after cranking engine).

Effect: Transaxle limp-in (2nd gear).

Probable Causes:
- Defective EATX relay (welded contacts) with an open SF1 circuit between controller and splice.
- Intermittent short to battery on SF1 circuit.
- Defective relay (intermittent contacts).
- Internal controller failure.

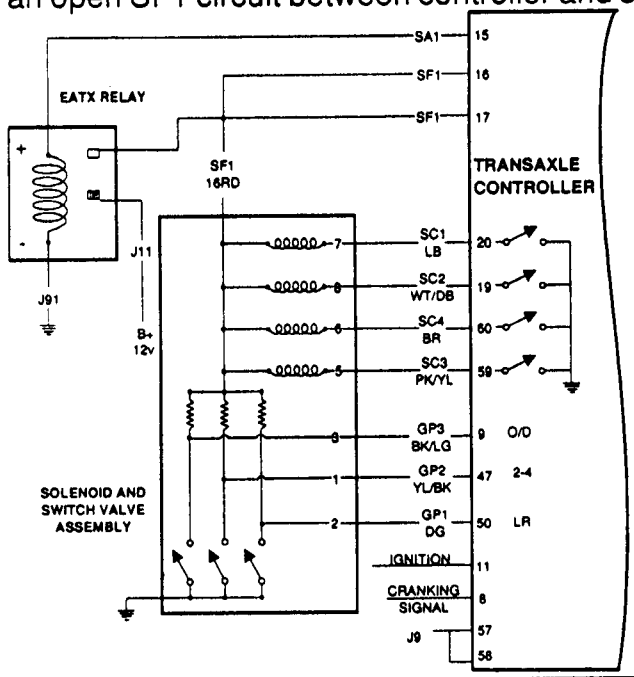

Code 21 to 27: Pressure Switch Circuits

Code 21 OD Pressure Switch Circuit
Code 22 24 Pressure Switch Circuit
Code 23 24 & OD Pressure Switch Circuits
Code 24 LR Pressure Switch Circuit
Code 25 LR & OD Pressure Switch Circuits
Code 26 LR & 24 Pressure Switch Circuits
Code 27 All Pressure Switch Circuits

Background: The A-604 transaxle system uses three pressure switches to monitor the fluid pressure in the LR, 24, and OD elements. The pressure switches are continuously checked for the correct states in each gear as indicated below:

Normal Pressure Switch States

GEAR	LR	24	OD
P	1	0	0
R	0	0	0
N	1	0	0
1ST	1	0	0
2ND	0	1	0
3RD	0	0	1
4TH	0	1	1

0 = Switch is open
1 = Switch is closed

When a pressure switch mismatch is detected, the solenoid circuits are tested for continuity. If that test fails, solenoid circuits are blamed for the pressure switches mismatch. Otherwise the appropriate pressure switch code is set.

Conditions To Set Code: The pressure switch states are checked when:

- Engine has been running for at least a few seconds.
- Correct transaxle fluid level.
- Transaxle is in gear.
- Pressure switch mismatch.

When Checked: Continuously.

Effect: Transaxle limp-in (2nd gear).

Probable Causes: - Low/high fluid level in transaxle.
- Short/open in GP1, GP2, or GP3 circuits.
- Solenoid pack internal problem.
- Internal transaxle problem.
- 60-way connector problem (cavities 9, 47, and 50).
- Internal controller failure.

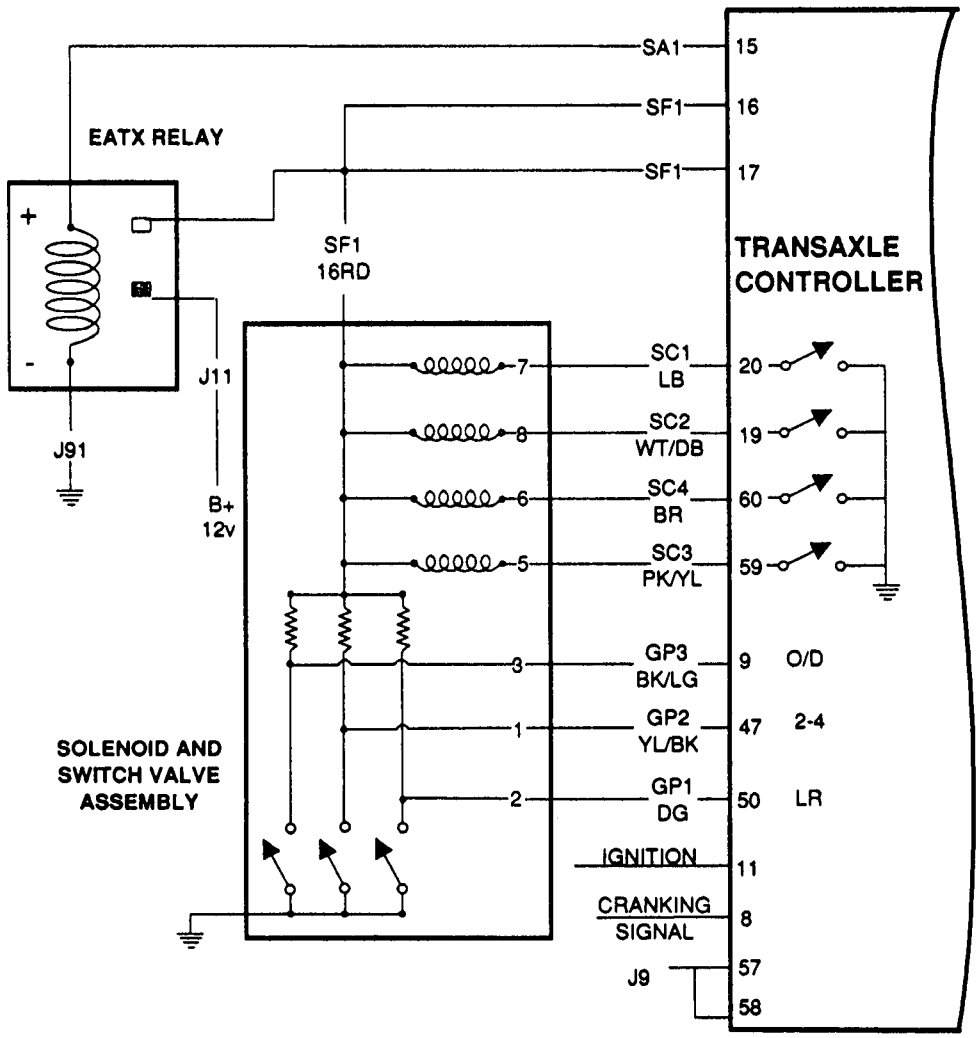

Code 28:	Check PRNDL Signal

Background:

PRNDL and Neutral/Start (N/S) switches are used to:
1. Determine the Shift Lever Position (SLP).
2. Supply a ground to the Starter Relay in Park and Neutral only.
3. Supply a ground to the Backup Lamp Relay in Reverse only.

The controller reads the switch signals (NS1 and RL1 from Neutral/Start switch, NS2 and RL2 from PRNDL switch) according to the table below which includes two recognized temporary codes that occur while moving SLP.

Normal PRNDL & Neutral/Start Switch States

SLP	NS2	NS1	RL2	RL1
P	1	1	0	0
R	0	0	1	1
N	0	1	1	0
OD	0	0	0	1
D	0	0	1	0
L	1	0	0	0
T1	1	0	0	0
T2	0	0	0	0

0 = Switch is open
1 = Switch is closed

When an invalid code is seen, the controller tries to determine SLP through hydraulic interpretation (by energizing some solenoids and monitoring the pressure switch responses).

Conditions To Set Code:

An invalid SLP code is seen for a few seconds.

When Checked:

Continuously.

Effect:

No limp-in. However, valid but incorrect PRNDL and Neutral/Start signals, (eg. shift lever is in OD position where R code is being received), may result in other fault codes and possibly a limp-in.

This is why it is very important to verify the correctness of the SLP signals before diagnosing any problems.

Probable Causes:
- Open/short S4 (same as NS1), NS2, RL1, RL2 or RL3.
- Open J2 circuit between N/S switch and splice.
- Open J91 circuit between PRNDL switch and splice.
- Defective or disconnected N/S or PRNDL switch
- Defective or disconnected Backup Lamp Relay.
- 60-way connector problem (cavities 1,2,3,41,42).
- Internal controller failure.

NOTE: If transaxle has been serviced recently one of these codes may appear, erase and retest to verify fault code was not set from lack of fluid in passages after service.

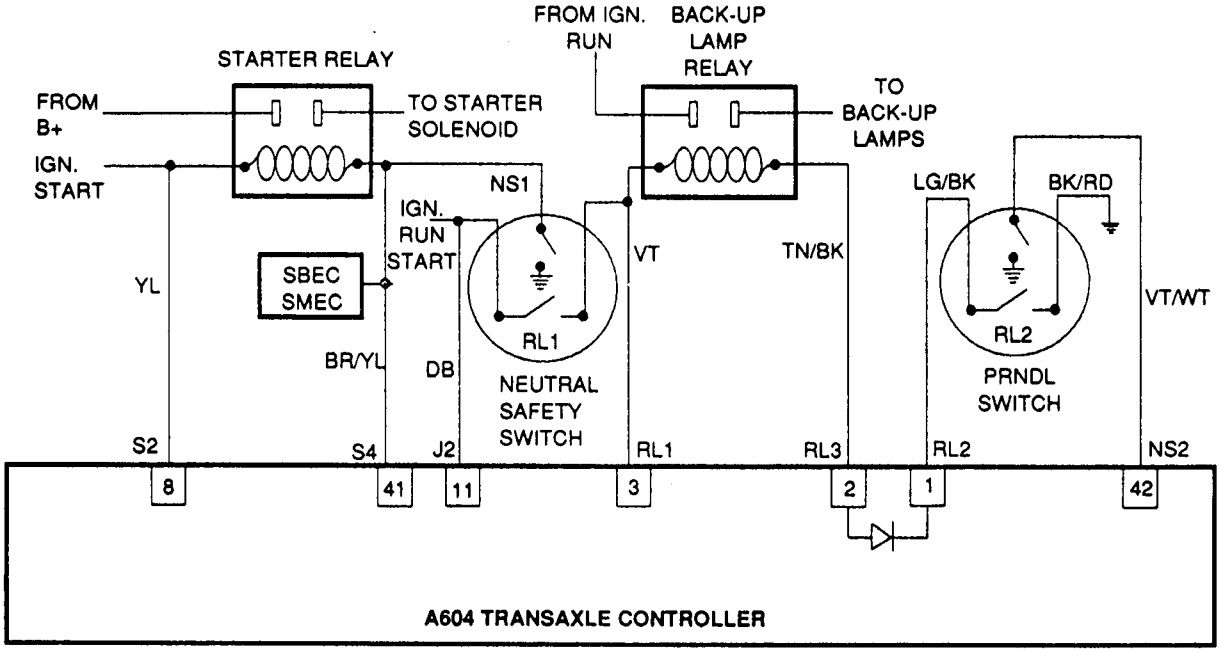

Code 29:	Throttle Position Signal

Background: The EATX controller receives the throttle signal (K7 circuit) and its ground (N5 circuit) from the Throttle Position Sensor (TPS). The TPS has a 5 volt pull up (K8 circuit) supplied by the engine controller. The throttle signal is checked for out-of-range as well as intermittency (excessive signal changes).

Conditions To Set Code:
- Throttle signal out-of range.

When Checked: Continuously.

Effect:
- No limp-in.
- A default throttle value is used.
- No lockup.
- No 4th gear.
- Limited shift schedule.
- Earlier coastdown shifts (ie. at higher speeds).

Probable Causes:
- Open/shorted K7 circuit.
- Open N5 circuit.
- Open K8 between TPS and engine controller.
- 60-way connector problem.
- Defective TPS.
- Defective engine controller.
- Internal controller failure.

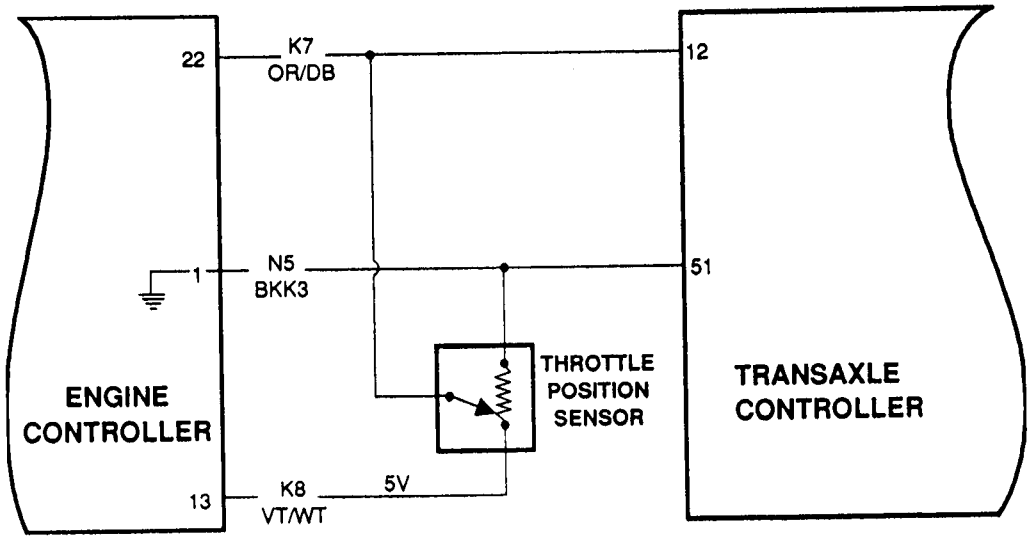

Code 31 to 33:	Hydraulic Pressure Switches

Code 31 **OD Hydraulic Pressure Switch**
Code 32 **24 Hydraulic Pressure Switch**
Code 33 **OD/24 Hydraulic Pressure Switches**

Background: The controller tests the OD and 24 pressure switches when they are off (ie. when the corresponding friction element is not applied). The test verifies that the switches are operational. The controller verifies that the switch closes when the corresponding element is applied. If a switch fails to respond, it is retested.

Conditions To Set Code:
- Transaxle is at normal operating temperature.
- Engine rpm is adequate to provide pump pressure.
- No speed or pressure switch mismatch exist.
- Transaxle is in gear:
  for OD --> in 1st or 2nd
  for 24 --> in 1st or 3rd.
- The pressure switch fails the test twice.

When Checked: After a shift is made, periodically thereafter.

Effect: Transaxle limp-in (2nd gear).

Probable Cause:
- Low/high transaxle fluid level.
- Solenoid pack problem.
- Internal transaxle problem.

Code 36:	**Fault Immediately After Shift (1991)**

Background: This code is not stored alone. It is stored if a speed error (codes 50 through 58) is detected immediately after a shift.

The existence of code 36 indicates a mechanical or hydraulic (non-electrical) related problems. It should be noted, however, that all mechanical problems don't necessarily result in code 36.

When this code exists, diagnosing the system should be based on the associated code and ONLY mechanical causes should be considered first.

Conditions To Set Code: Speed Error detected immediately after a shift.

When Checked: Speed Error code is stored.

Effect: Same as the associated code.

Probable Causes: Internal transaxle problem (refer to Speed Errors).

Code 37:	Solenoid Switch Valve (Stuck in the LU position)

Background: The Solenoid Switch Valve (SSV) controls the direction of the transmission fluid when the LR/LU solenoid is energized. SSV will be in the downshifted position in 1st gear, thus directing the fluid to the LR element. In 2nd, 3rd and 4th, the SSV will be in the upshifted position and directs the fluid into the Lockup Switch Valve which controls Torque Converter lockup.

When shifting into 1st gear, a special sequence is followed to insure SSV movement into the downshifted position. LR pressure switch is monitored to confirm SSV movement. If SSV movement is not confirmed, 2nd gear is substituted for 1st gear.

Conditions To Set Code:
- Transaxle is in normal operating temperature.
- Three unsuccessful attempts to shift into 1st (ie. SSV is stuck in the upshifted position).

When Checked: Prior to a shift into 1st.

Effect:
- No limp-in.
- No 1st gear (2nd gear is substituted).
- No lockup operation.

Note: Once the SSV fails to move to the downshifted position, the above effects will be noticed. However, the code will be set only after 3 attempt to shift into 1st gear.

Probable Causes: - Internal transaxle problem.

Code 38:	Lockup Control

Background: When in 2nd, 3rd or 4th gear, the torque converter can be locked when certain conditions are met. The LU piston is modulated (partial lock up) by modulating the LR/LU solenoid until the torque converter slip (difference between engine and turbine rpm) is within a desired range. Then the LR/LU solenoid is fully energized (full lockup).

Conditions To Set Code:
- Lock up conditions are met.
- The torque converter fails to lock up within the allowed time.
- Throttle less than 30 degrees.

Note: The general requirements for torque converter lock up are:
- Normal operating or high temperature.
- Brake is released.
- Throttle within proper range.
- No speed, pressure switch or throttle data error.
- Minimum vehicle speed which is a function of Shift Lever Position, gear, and engine temperature (eg. 46 mph with Shift Lever in OD and 4th gear).
- No Solenoid Switch Valve problem detected.

When Checked: When in partial lock up (PL).

Effect:
- No limp-in
- Lock up operation is inhibited.

Probable Causes:
- Low/high transaxle fluid.
- Internal transaxle problem.

Code 39:	**Gear ratio error for 89/90. For 91 code 39 has been broken down into codes 50-58. Refer to fault codes 50 through 58 for gear ratio fault code explanations and probable causes.**

Code 41 to 44: Solenoid Circuit Error

Code 41 **LR Solenoid Circuit Error**
Code 42 **24 Solenoid Circuit Error**
Code 43 **OD Solenoid Circuit Error**
Code 44 **UD Solenoid Circuit Error**

Background: Four solenoids are used to control the friction elements (clutches). The continuity of the solenoid circuits are tested periodically. Each solenoid is turned off and an inductive spike should be detected. When no spike is detected, the solenoid circuits are tested a second time to verify the failure. In addition to the periodic testing, solenoid circuits are tested when a speed or pressure switch circuit error occurs. In this case, one failure will result in setting the appropriate code.

Conditions To Set Code:
- Transaxle is in gear.
- Solenoid circuits fail the test.

When Checked:
- After reset, then periodically thereafter.
- When speed error or pressure switch mismatch is detected.

Effect: Transaxle limp-in (2nd gear).

Probable Causes:
- Open/shorted SC1, SC2, SC3 and SC4.
- Open J9 circuit.
- 8-way connector problem (cavities 4, 5, 6, 7, 8).
- 60-way connector problem (cavities 16, 17, 19, 20, 57, 58, 59 and 60).
- Solenoid Pack internal problem.
- Internal controller failure.

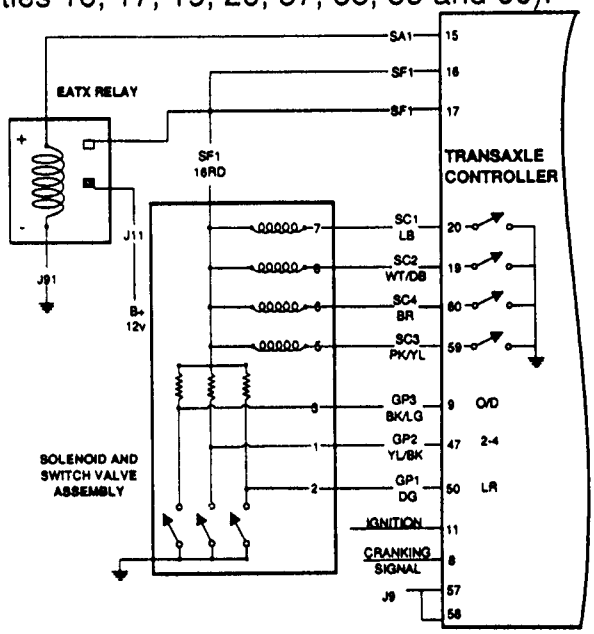

Code 45:	Internal A-604 Controller (EEPROM Memory Failure)

Background: The A-604 transmission system supports several engine models, each requiring different shift schedule and calibration constants. The EATX controller receives the engine model code from the engine controller and stores it in the microprocessor's EEPROM memory. Once the engine model code is established in the EEPROM memory, it is used thereafter to select the appropriate shift schedule and other calibrations.

The EEPROM memory location used for the engine model code is checked to verify its ability to hold data. If this EEPROM memory location fails the checks, the code is set.

Conditions To Set Code:
- A new transaxle controller is installed.
- C^2D bus is operational.
- The EEPROM memory location used to store engine model fails the checks (data read from it doesn't match data written to it).

When Checked: After a reset (ignition key turned to the RUN position or after cranking engine).

Effect: No limp-in.

Probable Causes: Internal controller failure.

Code 46: **3-4 Shift Abort**

Background: The following table shows the clutches applied in each gear:

Gear	UD	OD	REV	24	LR
Park					X
Reverse			X		X
Neutral					X
1st	X				X
2nd	X			X	
3rd	X	X			
4th		X		X	

When shifting from third to fourth gear, a delayed speed change will indicate a problem in the UD hydraulic circuit. When this is detected, the 3-4 shift is aborted temporarily. The controller will reattempt the 3-4 shift. After three unsuccessful shift attempts, the code is set.

Conditions To Set Code: Three unsuccessful 3-4 shift attempts.

When Checked: Prior to the 3-4 shift.

Effect: No limp-in.

Probable Causes: Internal transaxle failure.

Code 47:	Solenoid Switch Valve (1991) (Stuck in the LR position)

Background: The solenoid switch valve (SSV) controls the direction of the transmission fluid when the LR/LU solenoid is energized. The SSV will be in the down shiftedposition in 1st gear, thus directing the fluid to the LR element. In 2nd, 3rd and 4th, it will be in the upshifted position and directs the fluid into the lockup switch valve which controls torque converter lockup.

When doing partial lockup (PL) or full lockup (FL), the LR pressure switch should indicate no pressure if SSV is in the LU position. If LR pressure switch indicates pressure for some time while in PL or FL, lockup operation is aborted and inhibited to avoid inadvertent application of the LR clutch.

Conditions To Set Code:
- In partial or full lock up.
- Two back to back occurrences of LR pressure build up.

When Checked: Continuously when doing partial or full lock up.

Effect: Transaxle limp-in (2nd gear).

Probable Causes:
- Internal transaxle problem.

Code 50 to 58: Speeds Error (1991)

Code 50	**Gear Ratio In Reverse**
Code 51	**Gear Ratio In 1st**
Code 52	**Gear Ratio In 2nd**
Code 53	**Gear Ratio In 3rd**
Code 54	**Gear Ratio In 4th**
Code 55	**Gear Ratio In Neutral (Will not be stored; reserved for future use).**
Code 56	**Turbine Speed Sensor**
Code 57	**Output Speed Sensor**
Code 58	**Speed Sensors Ground**

Note: Prior to 1991 MY, all these codes correspond to code 39.

Background: The A-604 system uses two speed sensors for turbine rpm (Nt) and output rpm (No). These inputs are very essential for the transaxle operation. Therefore the integrity of this data is verified through the following checks:

1. When in gear, if Nt/No doesn't compare to a known gear ratio, the corresponding in-gear fault code is set (50 through 55).
2. An excessive change in turbine or output speeds indicating signal intermittency will result in codes 56 and 57 respectively.
3. After a reset in neutral, observing a certain Nt/No ratio indicates a loss of the common speed sensors ground which sets code 58.

Note: When any of these codes are set immediately after a shift, code 36 will also be set which indicates mechanical hydraulic problems (see code 36).

Conditions To Set Code:

Codes 50 through 54 - In-Gear Ratio Error Nt/No doesn't compare to the particular gear ratio.

Code 55 - In-Neutral Ratio Error Code will not be seen. (Reserved for future use.)

Code 56 - Turbine Speed Sensor An excessive change in turbine rpm (Nt) in any gear.

Code 57 - Output Speed Sensor An excessive change in output rpm (No) in any gear.

Code 58 - Sensors Ground After a reset in Neutral and Nt/No equals a certain ratio (turbine gear teeth / output gear teeth).

When Checked: Continuously when transaxle is in gear.

Effect: Transaxle limp-in (2nd gear).

Note: Errors in speed data are tolerated for some time before going into limp-in. However, once an error is detected, this sequence of events will be followed:

- Shifts are inhibited.
- Lock up operation is inhibited.
- Solenoid circuits are tested and, if they fail, are blamed for the speeds error.
- Limp-in (2nd gear).

Probable Causes:

	Speed Error Code									
Probable Causes	**50**	**51**	**52**	**53**	**54**	**55**	**56**	**57**	**58**	
Open/shorted SO1 circuit	X	X								
Defective Output Sensor	X	X					X			
Output Sensor Connector Problem	X	X					X			
60-way Connector Problem										
Cavity 13	X	X					X	X		
Cavity 14	X	X						X		
Cavity 52	X	X					X			
Open/shorted ST1 circuit	X	X								
Defective Turbine Sensor	X	X					X			
Turbine Sensor Connector Problem	X	X					X			
Open SG5 circuit (Sensors Ground)									X	
Internal Controller Failure	X	X					X	X	X	
Internal Transaxle Problem	X	X	X	X	X					

Note: Code 55 will not be seen in 1991. It is reserved for future use.

Code 60 to 63: Inadequate Element Volumes (1991)

Code 60 Inadequate LR Element Volume
Code 61 Inadequate 24 Element Volume
Code 62 Inadequate OD Element Volume
Code 63 Inadequate UD Element Volume

Background: The volumes of the transmission fluid needed to apply the friction elements are continuously monitored and learned for adaptive controls. As the friction material wears, the volume of fluid needed to apply the element increases. The following are the typical A-604 clutch volumes beyond which the clutches might be damaged:

LR: 35 to 83	OD: 75 to 150
24: 20 to 77	UD: 24 to 70

However, certain transaxle mechanical problems (such as broken return spring, out-of-position snap ring, etc..) can cause near-zero learned volumes which would result in setting the appropriate code.

Conditions To Set Code: The updated learned element volume is below a threshold value.

When Checked: When volumes are updated:

- LR: When doing a 21 or 31 shift.
- 24: When doing a 12 shift.
- OD: When doing a 23 shift.
- UD: When doing a 43 or 42 shift.

Effect: No limp-in.

Probable Causes: Internal transaxle problem.

DIAGNOSTIC CONNECTOR LOCATION

A light blue six-way connector with four male pins. This connector allows the DRBII access to the CCD (Chrysler Collision Detection) Bus. With the DRBII connected here, the technician can perform diagnostic tests on the following:

The Body Computer
The Security Alarm System (SAM)
The A-604 Transaxle
The Electronic Instrument Cluster
The Air Suspension System

Location:

On the C body, this connector is located inside the vehicle, under the dash, just to the right of the steering column.

On the Y body, this connector is located inside the vehicle, under the dash, to the left of the steering column.

On the A, G, J, P and S bodies, the connector is located inside the vehicle, under the dash, on the extreme left, behind the fuse access panel.

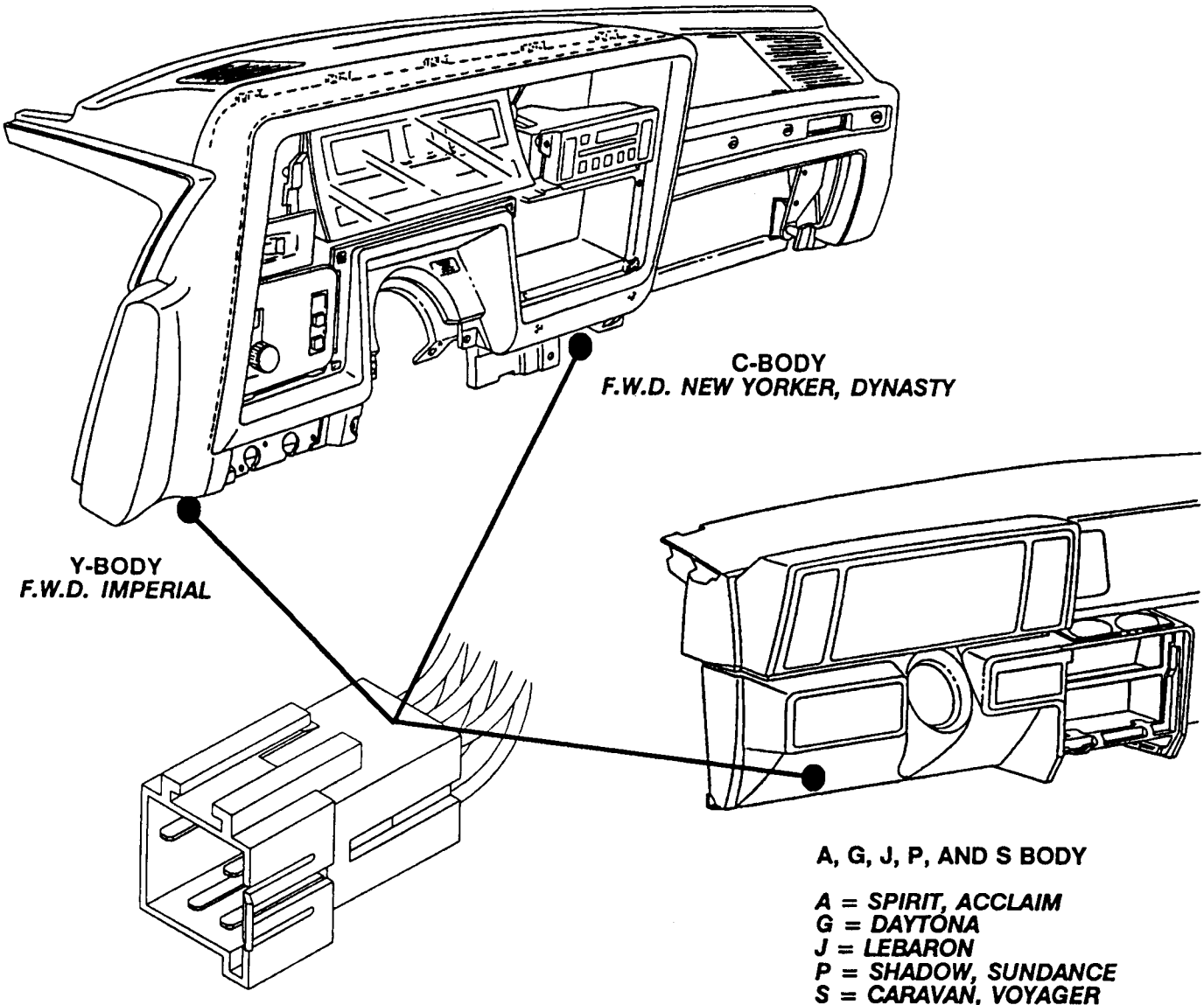

INTRODUCTION
CHRYSLER A604

The new A604 computer controlled Automatic Overdrive Transaxle has some unique features. This unit contains no bands or freewheel devices (sprags or one-way roller clutches). The shift cycles are controlled by the onboard computer. The computer is designed if a problem is encountered to have the transmission default to second speed, reverse, park and neutral. Through a series of fault codes the technician will be able to diagnosis the cause of the malfunction. This booklet is designed to give the technician an introduction to the operation and differences in this unit compared to previous units.

We thank CHRYSLER CORPORATION for the information and illustrations that have made this booklet possible

The information and part numbers contained in this booklet have been carefully compiled from industry sources known for their reliability, but ATSG does not guarantee its accuracy.

ROBERT D. CHERRNAY
TECHNICAL DIRECTOR

DALE ENGLAND
FIELD SERVICE CONSULTANT

FRANK MIETUS
TECHNICAL CONSULTANT

WAYNE COLONNA
TECHNICAL CONSULTANT

WELDON BARNETT
TECHNICAL CONSULTANT

ED KRUSE
LAYOUT

AUTOMATIC TRANSMISSION SERVICE GROUP
9200 SOUTH DADELAND BLVD.
SUITE 720
MIAMI, FLORIDA 33156
(305) 661-4161

INTRODUCTION
CHRYSLER A604

The new A604 computer controlled Automatic Overdrive Transaxle has some unique features. This unit contains no bands or freewheel devices (sprags or one-way roller clutches). The shift cycles are controlled by the onboard computer. The computer is designed if a problem is encountered to have the transmission default to second speed, reverse, park and neutral. Through a series of fault codes the technician will be able to diagnosis the cause of the malfunction. This booklet is designed to give the technician an introduction to the operation and differences in this unit compared to previous units.

We thank CHRYSLER CORPORATION for the information and illustrations that have made this booklet possible

The information and part numbers contained in this booklet have been carefully compiled from industry sources known for their reliability, but ATSG does not guarantee its accuracy.

ROBERT D. CHERRNAY
TECHNICAL DIRECTOR

DALE ENGLAND
FIELD SERVICE CONSULTANT

FRANK MIETUS
TECHNICAL CONSULTANT

WAYNE COLONNA
TECHNICAL CONSULTANT

WELDON BARNETT
TECHNICAL CONSULTANT

ED KRUSE
LAYOUT

AUTOMATIC TRANSMISSION SERVICE GROUP
9200 SOUTH DADELAND BLVD.
SUITE 720
MIAMI, FLORIDA 33156
(305) 661-4161

INDEX

	PAGE
DESCRIPTION	4
DIAGNOSIS TESTS	10
OIL FLOW DIAGRAMS	15
ADJUST VENTS	33
TEARDOWN ASSEMBLY	38
VALVE BODY	41
SPECIFICATIONS	78

AUTOMATIC TRANSMISSION SERVICE GROUP

ELECTRONIC FOUR-SPEED AUTOMATIC TRANSAXLE

Function: The transmission provides forward ratios of 2.84, 1.57, 1.0, and 0.69 with lockup available in 4th gear; the Reverse ratio is 2.21. The shift quadrant has six positions: P, R, N, OD, D, and L. The OD position is actually a "D" inside an "O" to indicate overdrive operation. When OD is selected, the transmission shifts normally through all four speeds. It is recommended for most driving. The D position is used for hilly or mountainous driving. When D is selected, the transmission uses only 1st, 2nd, and 3rd gears. When operating in D or L positions torque converter lock-up occurs in third gear for improved transmission cooling when towing trailers on steep grades. If high engine coolant temperature occurs, the torque converter will also lock up in 2nd gear. The L position provides maximum engine braking for descending steep grades. Unlike most current transmissions, up-shifts are provided to 2nd or 3rd at peak engine speeds if the accelerator is depressed. This provides engine over-speed protection and maximum performance.

Description: The electronic controls make the transmission unique in a number of ways. First, the adaptive controls are used to significantly reduce complexity. Relative to today's three-speed unit, the new transaxle requires no additional gearing, one less overrunning clutch, and only one more friction element. It has 20 fewer part numbers than today's three-speed unit. The resulting compactness allows the new four-speed transaxle to package in the same vehicles and with the same ground clearance as the three-speed unit and the lockup torque converter is similar to the one used in other front-wheel drive units. Torque capacity for future vehicles and engines has been assured by using larger gearing throughout than in the present three-speed transaxle; yet it weighs only 5.9 kg (13 pounds) more and is only 13 mm (0.5 in.) longer. For manufacturing simplification, the planetary gears are the same diameter and length and have the same number of teeth as those used in our three-speed rear-drive passenger car unit. Also, the engine-to-differential center line dimension has been preserved, simplifying installation in existing vehicles.

ELECTRONIC FOUR-SPEED AUTOMATIC TRANSAXLE AND FINAL DRIVE

The transmission uses only clutches to change ratios. Clutches provide smooth, consistent shifts whereas bands, which are used in some transmissions, are harder to control and less consistent.

Actuation and release of the clutches is controlled by ball-type solenoid valves, which were chosen for maximum reliability in the transmission operating environment. Moreover, the solenoids operate the valves directly without any intermediate element.

Further simplification is achieved through a unique logic-controlled switching valve which permits one solenoid to control the application of two friction elements. Any selection of 2nd, 3rd, or 4th gear elements causes this valve to

release Low Gear. A failure cannot reselect it. When a shift to Low Gear is appropriate, the logic first determines that no malfunctions exist, then a specific sequence of solenoid commands is used to shift the valve and again select Low Gear.

The control electronics are located underhood in a potted, die cast aluminum housing with a sealed, 40-way connector. On New Yorker, and New Yorker Landau, Dynasty, Spirit and Acclaim, the control computer is located on the right fender side shield. On Caravan and Voyager it is located on the right side of the dash panel.

The transmission control computer for the Dodge Caravan and Plymouth Voyager includes control logic to protect the transmission from overheating. In trailer towing situations where the vehicle is operated in "D" which does not permit a shift to overdrive, the torque converter will lock up in 2nd as well as 3rd gear if the coolant temperature becomes moderately high. This reduces transmission heat rejection by reducing torque converter slippage and reduces engine heat rejection by lowering engine speed.

Through the use of SMD's (surface mount devices) and ASIC's (application-specific integrated circuits), the controller size was minimized. The electrical power requirements of the control system have been minimized by using switch-mode, current-controlled solenoid drivers and an efficient CMOS (complementary metal-oxide semi-conductor) microprocessor. These features combine to provide a state-of-the-art control system for the transmission.

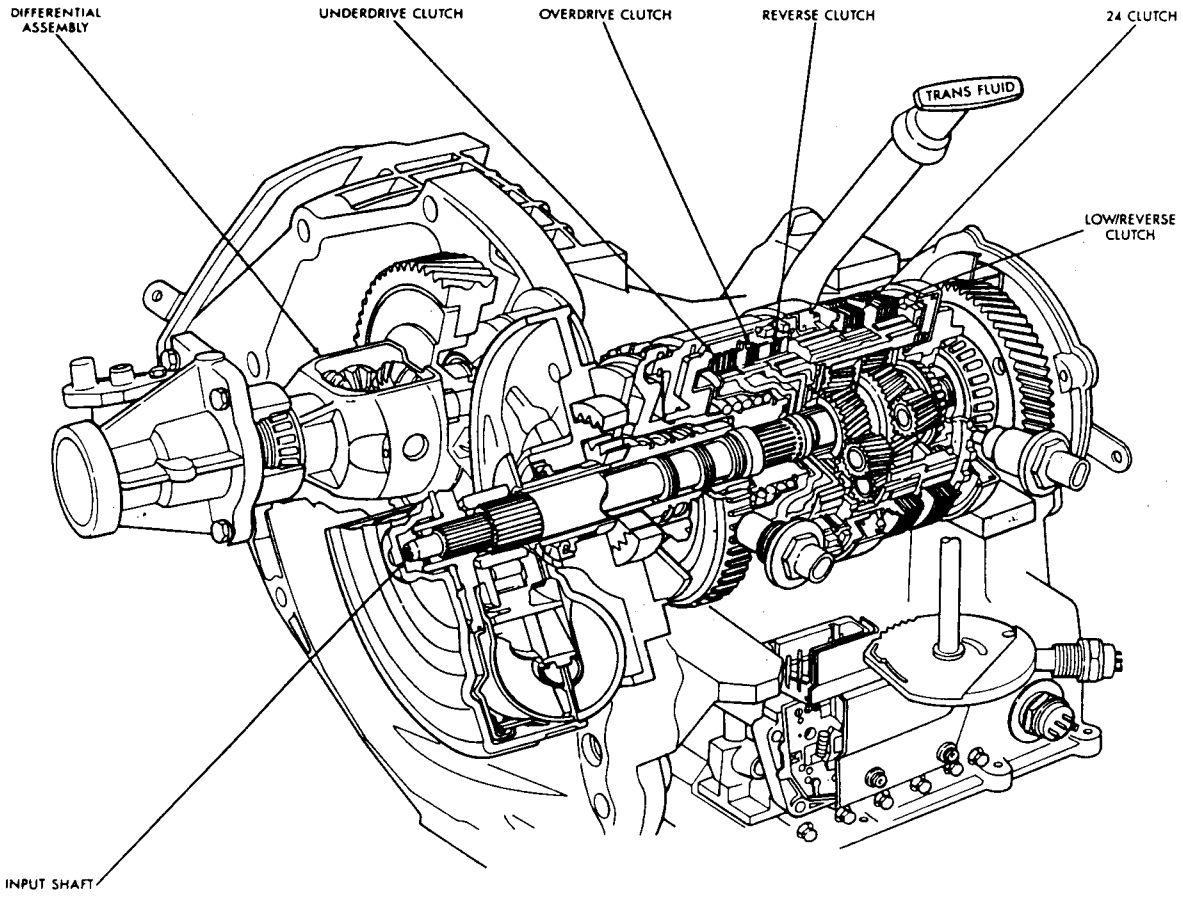

A-604 4-SPEED

ELECTRONIC AUTOMATIC TRANSAXLE

GENERAL INFORMATION

The A-604 electronic four-speed FWD transaxle is the first use of fully-adaptive controls in a production automotive transmission. Adaptive controls are those which perform their functions based on real-time feedback sensor information, just as is done by electronic antilock brake controls. Although the transaxle is conventional in that it uses hydraulically-applied clutches to shift a planetary geartrain, its use of electronics to control virtually all functions is unique.

Operation

The transaxle provides forward ratios of 2.84, 1.57, 1.00, and 0.69 with torque converter lockup available in 2nd, direct, or overdrive gear; the Reverse ratio is 2.21. The shift lever is conventional with six positions: P, R, N, OD, D, and L. When OD is selected the transaxle shifts normally through all four speeds with lockup in overdrive; this position is recommended for most driving. The D position is tailored for use in hilly or mountainous driving. When D is selected, the transmission uses only 1st, 2nd, and direct gears with 2-direct shift delayed to 40 mph or greater. When operating in D or L positions torque converter lockup occurs in direct gear for improved transmission cooling when towing trailers and steep grades. If high engine coolant temperature occurs, the torque converter will also lock up in 2nd gear. The L position provides maximum engine braking for descending steep grades. Unlike most current transaxles, upshifts are provided to 2nd or direct at peak engine speeds if the accelerator is depressed. This provides engine over-speed protection and maximum performance.

Clutch and Gear

The A-604 transaxle consists of three multiple-disc input clutches, two multiple-disc grounded clutches, four hydraulic accumulators, and two planetary gearsets to provide 4 speeds forward and a reverse ratio. Since this transaxle is expected to operate properly with today's high-speed engines, its clutch-apply pistons were designed with centrifugally-balanced oil cavities so that quick response and good control can be achieved at any speed. A unique push/pull piston is incorporated for two of the three input clutches without any added pressure seals; the third clutch requires one additional seal.

Hydraulics

The hydraulics of the new transaxle provide the manual shift lever select function, main line pressure regulation, and torque converter and cooler flow control. Oil flow to the friction elements is controlled directly by four solenoid valves. The hydraulics also include a unique logic-controlled "solenoid switch valve" which locks out the 1st gear reaction element with the application of 2nd, direct, or overdrive gear elements, and redirects the 1st gear solenoid output so that it can control torque converter lockup operation. To regain access to 1st gear, a special sequence of solenoid commands must be used to unlock and move the solenoid switch valve. This precludes any application of the 1st gear reaction element with other elements applied unless specifically commanded by a properly functioning controller; it also allows one solenoid to control two friction elements.

Small, high-rate accumulators are provided in each controlled friction element circuit. These serve to absorb the pressure responses, and allow

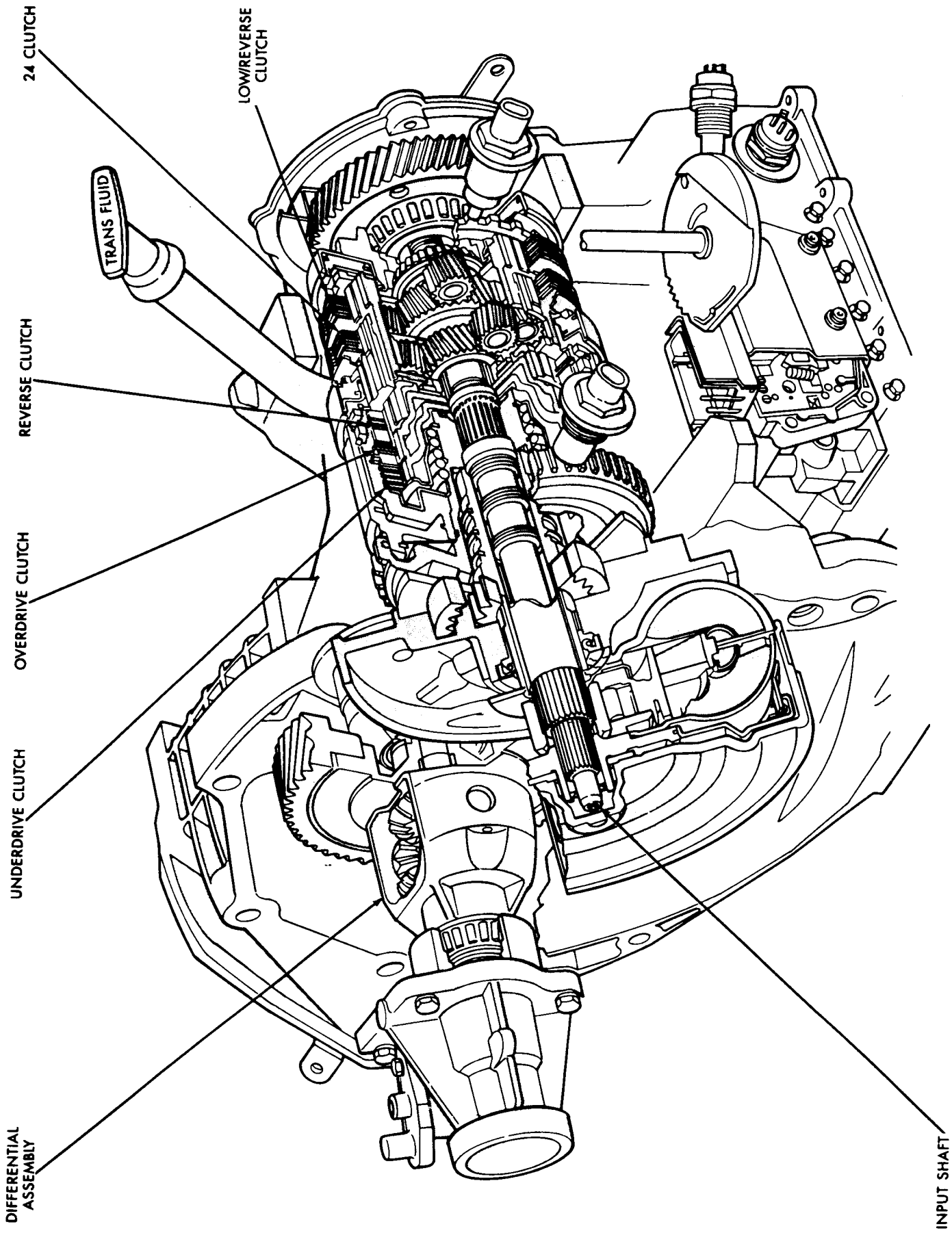
24 CLUTCH
LOW/REVERSE CLUTCH
TRANS FLUID
REVERSE CLUTCH
OVERDRIVE CLUTCH
UNDERDRIVE CLUTCH
DIFFERENTIAL ASSEMBLY
INPUT SHAFT

the controls to read and respond to changes that are occurring.

Solenoids

Since the solenoid valves perform virtually all control functions, these valves must be extremely durable and tolerant of normal dirt particles. For that reason hardened-steel poppet and ball valves are used. These are free from any close operating clearances, and the solenoids operate the valves directly without any intermediate element. Direct operation means that these units must have very high output so that they can close against the sizeable flow areas and high line pressures. Fast response is also required to meet the control requirements.

Two of the solenoids are normally-venting and two are normally-applying; this was done to provide a default mode of operation. With no electrical power, the transmission provides 2nd gear in "OD," "D," or "L" shift lever positions, neutral in "N", reverse in "R", and park in "P". The choice of 2nd gear was made to provide adequate breakaway performance while still accommodating highway speeds.

Sensors

Other electrical components include: three pressure switches to identify solenoid application, two speed sensors to read input (torque converter turbine) and output (parking sprag) speeds, and position switches to indicate the manual shift lever position. The pressure switches are incorporated in an assembly with the solenoids. Engine speed, throttle position, temperature, etc., are also observed. Some of these signals are read directly from the engine control sensors; others are read from a C^2D multiplex circuit with the engine controller.

Electronics

The control electronic unit is located underhood in a potted, diecast aluminum housing with a sealed, 60-way connector.

Adaptive Controls

These controls function by reading the input and output speeds over 140 times a second and responding to each new reading. This provides the precise and sophisticated friction element control needed to make smooth clutch-to-clutch shifts for all gear changes without the use of overrunning clutches or other shift quality aids. As with most automatic transaxles, all shifts involve releasing one element and applying a different element. In simplified terms, the upshift logic allows the releasing element to slip backwards slightly to ensure that it does not have excess capacity; the apply element is filled until it begins to make the speed change to the higher gear; its apply pressure is then controlled to maintain the desired rate of speed change until the shift is complete. The key to providing excellent shift quality is precision; for example, as mentioned, the release element for upshifts is allowed to slip backwards slightly; the amount of that slip is typically less than a total of 20 degrees. To achieve that precision, **the controller learns the characteristics of the particular transaxle that it is controlling; it learns the release rate of the releasing element, the apply time of the applying element, the rate at which the apply element builds pressure sufficient to begin to make the speed change,** and so on. This method achieves more precision than would be possible with exacting tolerances and it can adapt to any changes that occur with age or environment, for example, altitude, temperature, engine output, etc.

For kickdown shifts, the control logic allows the releasing element to slip and then controls the rate at which the input (and engine) accelerate; when the lower gear speed is achieved, the releasing element reapplies to maintain that speed until the apply element is filled. This provides quick response since the engine begins to accelerate immediately and a smooth torque exchange since the release element can control the rate of torque increase. This control can make any powertrain feel more responsive without increasing harshness.

Since adaptive controls respond to input speed changes, they inherently compensate for changes in engine or friction element torque and provide good, consistent shift quality for the life of the transaxle.

Diagnostics

These controls also provide comprehensive, onboard transaxle diagnostics, and, thanks to the learning of individual characteristics, the information available can be truly revealing. For example, apply element buildup rate indicates solenoid performance. Also included are self-diagnostic functions which allow the technician to test the integrity of the electronic controls without requiring a roadtest. Moreover, the controller continuously monitors its critical functions, records any malfunctions, and the number of engine starts since the last malfunction so that the technician can use the information in the event of a customer complaint.

Diagnosis and Tests

DIAGNOSIS—GENERAL

CAUTION: Before attempting any repair on the A-604 Electronic Automatic Transaxle, always check for fault codes with the DRBII using the "Powertrain Diagnostic Test Procedure Manual (A-604)."

Automatic transaxle malfunctions may be caused by four general conditions: poor engine performance, improper adjustments, hydraulic malfunctions, mechanical malfunctions, and electronic malfunctions. Diagnosis of these problems should always begin by checking the easily accessible variables: fluid level and condition, gearshift cable adjustment. Then perform a road test to determine if the problem has been corrected or that more diagnosis is necessary. If the problem exists after the preliminary tests and corrections are completed, hydraulic pressure checks should be peformed.

Fluid Level and Condition

The transmission and differential sump have a common oil sump with a communicating opening between the two.

Since this torque converter fills in both the "P" Park and "N" Neutral positions, place the selector level in "P" Park to be sure that the fluid level check is accurate. **The engine should be running at idle speed for at least one minute, with the vehicle on level ground. This will assure complete oil level stabilization between differential and transmission.** The fluid should be at normal operating temperature (approximately 82°C or 180°F). The fluid level is correct if it is in the "HOT" region (cross-hatched area) on the oil level indicator.

Low fluid level can cause a variety of conditions because it allows the pump to take in air along with the fluid. As in any hydraulic system, air bubbles make the fluid spongy, therefore, pressures will be low and build up slowly.

Improper filling can also raise the fluid level too high. When the transaxle has too much fluid, the gears churn up foam and cause the same conditions which occur with a low fluid level.

In either case, the air bubbles can cause overheating, fluid oxidation, and varnishing, which can interfere with normal valve, clutch, and accumulator operation. Foaming can also result in fluid escaping from the transaxle vent where it may be mistaken for a leak.

Along with fluid level, it is important to check the condition of the fluid. When the fluid smells burned, and is contaminated with metal or friction material particles, a complete transaxle overhaul is needed. Be sure to examine the fluid on the dipstick closely. If there is any doubt about its condition, drain out a sample for a double check.

After the fluid has been checked, seat the dipstick fully to seal out water and dirt.

Gearshift Linkage

Normal operation of the PRNDL and neutral safety switch provides a quick check to confirm proper manual linkage adjustment.

Move the selector level slowly upward until it clicks into the "P" Park notch in the selector gate. If the starter will operate the "P" position is correct.

After checking "P" position move the selector slowly toward "N" Neutral position until lever drops at the end of the "N" stop in the selector gate. If the starter will also operate at this point the gearshift linkage is properly adjusted. If adjustment is required, refer to gearshift linkage adjustment in Maintenance and Adjustments and refer to DRBII in the "Diagnostic Test Procedure Manual."

Road Test

Prior to performing a road test, be certain that the fluid level and condition, and control cable adjustment have been checked and approved.

During the road test, the transaxle should be operated in each position to check for slipping and any variation in shifting.

In most cases, the clutch that is slipping can be determined by noting the transaxle operation in all selector positions and by comparing which internal units are applied in those positions. The "Elements in Use Chart" provides a basis for road test analysis.

The process of eliminating can be used to de-

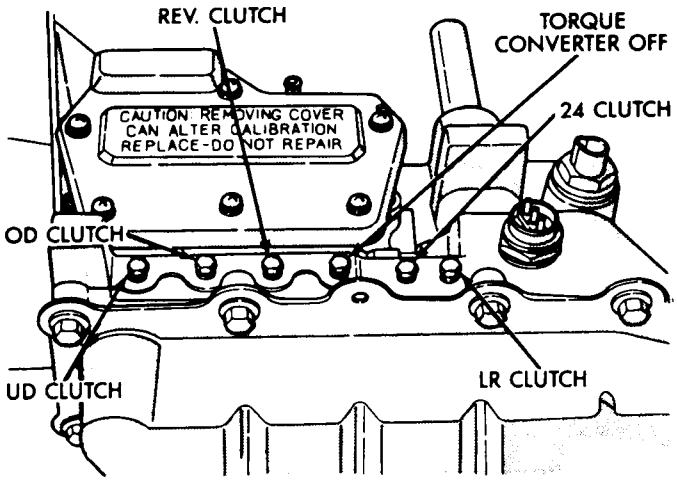

Fig. 1—Pressure Taps

Test One (Selector in L—1st gear)

(1) Attach pressure gauge to the low/reverse clutch tap.

(2) Move selector lever to the L position.

(3) Allow vehicle wheels to turn and increase throttle opening to achieve an indicated vehicle speed to 20 mph.

(4) Low/reverse clutch pressure should read 115 to 145 psi.

(5) This test checks pump output, pressure regulation and condition of the low/reverse clutch hydraulic circuit and shift schedule.

Test Two (Selector in D—2nd gear)

(1) Attach gauge to the underdrive clutch tap.

(2) Move selector lever to the D position.

(3) Allow vehicle wheels to turn and increase throttle opening to achieve an indicated vehicle speed of 30 mph.

(4) Underdrive clutch pressure should read 110 to 145 psi.

(5) This test checks the underdrive clutch hydraulic circuit as well as the shift schedule.

Test Three (overdrive clutch check)

(1) Attach gauge to the overdrive clutch tap.

(2) Move selector lever to the circle D position.

(3) Allow vehicle wheels to turn and increase throttle opening to achieve an indicated vehicle speed of 20 mph.

(4) Overdrive clutch pressure should read 74 to 95 psi.

(5) Move selector lever to the D position and increase indicated vehicle speed to 30 mph.

(6) The vehicle should be in second gear and overdrive clutch pressure should be less than 5 psi.

(7) This test checks the overdrive clutch hydraulic circuit as well as the shift schedule.

Test Four (Selector in Circle D—overdrive gear)

(1) Attach gauge to the 2/4 clutch tap.

(2) Move selector lever to the circle D position.

(3) Allow vehicle front wheels to turn and increase throttle opening to achieve an indicated vehicle speed of 30 mph.

(4) The 2/4 clutch pressure should read 75 to 95 psi.

(5) This test checks the 2/4 clutch hydraulic circuit.

Test Five (Selector in circle D—overdrive lockup)

(1) Attach gauge to the lockup off pressure tap.

(2) Move selector lever to the circle D position.

(3) Allow vehicle wheels to turn and increase throttle opening to achieve an indicated vehicle speed to 50 mph.

Caution: Both wheels must turn at the same speed.

(4) Lockup off pressure should be less than 5 psi.

(5) This test checks the lockup clutch hydraulic circuit.

Test Six (Selector in Reverse)

(1) Attach gauge to the reverse clutch tap.

(2) Move selector lever to the reverse position.

(3) Read reverse clutch pressure with output stationary (foot on brake) and throttle opened to achieve 1500 rpm.

(4) Reverse clutch pressure should read 165 to 235 psi.

(5) This test checks the reverse clutch hydraulic circuit.

Test Result Indications

(1) If proper line pressure is found in any one test, the pump and pressure regulator are working properly.

(2) Low pressure in all positions indicates a defective pump, a clogged filter, or a stuck pressure regulator valve.

(3) Clutch circuit leaks are indicated if pressures do not fall within the specified pressure range.

(4) If the overdrive clutch pressure is greater than 5 psi in step 6 of Test Three, a worn reaction shaft seal ring is indicated.

A-604 PRESSURE CHECK SPECIFICATIONS

(on hoist, with front wheels free to turn)
PRESSURE TAP ORDER ON CASE FROM BELLHOUSING TO END COVER
ALL PRESSURE ARE PSI

Gear Selector Position	Actual Gear	PRESSURE TAPS					
		Under-Drive Clutch	Over-Drive Clutch	Reverse Clutch	Lockup Off	2/4 Clutch	Low/ Reverse Clutch
PARK * 0 mph	PARK	0-2	0-5	0-2	60-110	0-2	115-145
REVERSE * 0 mph	REVERSE	0-2	0-7	165-235	50-100	0-2	165-235
NEUTRAL * 0 mph	NEUTRAL	0-2	0-5	0-2	60-110	0-2	115-145
L # 20 mph	FIRST	110-145	0-5	0-2	60-110	0-2	115-145
D # 30 mph	SECOND	110-145	0-5	0-2	60-110	115-145	0-2
D # 45 mph	DIRECT	75-95	75-95	0-2	60-90	0-2	0-2
OD # 30 mph	OVERDRIVE	0-2	75-95	0-2	60-90	75-95	0-2
OD # 50 mph	OVERDRIVE LOCKUP	0-2	75-95	0-2	0-5	75-95	0-2

***Engine speed at 1500 rpm**
#CAUTION: Both front wheels must be turning at same speed.

DEFAULT CODE CHART "A"

Condition	21	22	23	24	25	26	27	31	32	33	37	38	39
	OD clutch—Pressure too low	2/4 clutch—Pressure too low	2/4 clutch and OD clutch—Pressures too low	L/R clutch—Pressure too low	L/R clutch and OD clutch—pressures too low	L/R clutch and 2/4 clutch—pressures too low	OD, 2/4, and L/R clutches—pressures too low	OD clutch pressure switch response failure	2/4 pressure switch response failure	2/4 and OD clutch pressure response failures	Solenoid switch valve failure	Partial lockup control out of range	Speed ratio default
Default Code Number													
Low fluid level	X	X	X	X	X	X	X	X	X	X			X
Aerated fluid (high fluid level)	X	X	X	X	X	X	X	X	X	X			
Worn or damaged reaction shaft support seal rings	X												X
Worn or damaged input shaft seal rings												X	X
Worn pump	X	X	X	X	X	X	X	X	X	X		X	X
Damage or failed clutches:													
UD clutch													X
OD clutch	X							X					X
Reverse clutch													X
2/4 clutch		X							X				X
L/R clutch				X									X
Damaged clutch seals	X	X	X	X	X	X	X						X
Worn or damaged accumulator seal rings	X	X	X	X	X	X	X						X
Plugged filter	X	X	X	X	X	X	X			X			X
Stuck/sticky valves	X	X	X	X	X	X	X				X	X	X
Solenoid switch valve											X		
Lockup switch valve												X	
Torque converter control valve												X	
Regulator valve	X	X	X	X	X	X	X						X
Valve body leakage	X	X	X	X	X	X	X	X	X	X	X	X	X
Pressures too high	X	X	X	X	X	X	X					X	X
Internal solenoid leak	X	X	X	X	X	X	X	X	X	X	X	X	X
Torque converter lockup clutch failure	X	X	X	X	X	X	X	X				X	
Faulty cooling system	X	X	X	X	X	X	X						X
Damaged speed sensor gear teeth													X
Planetary gearsets broken or seized													X

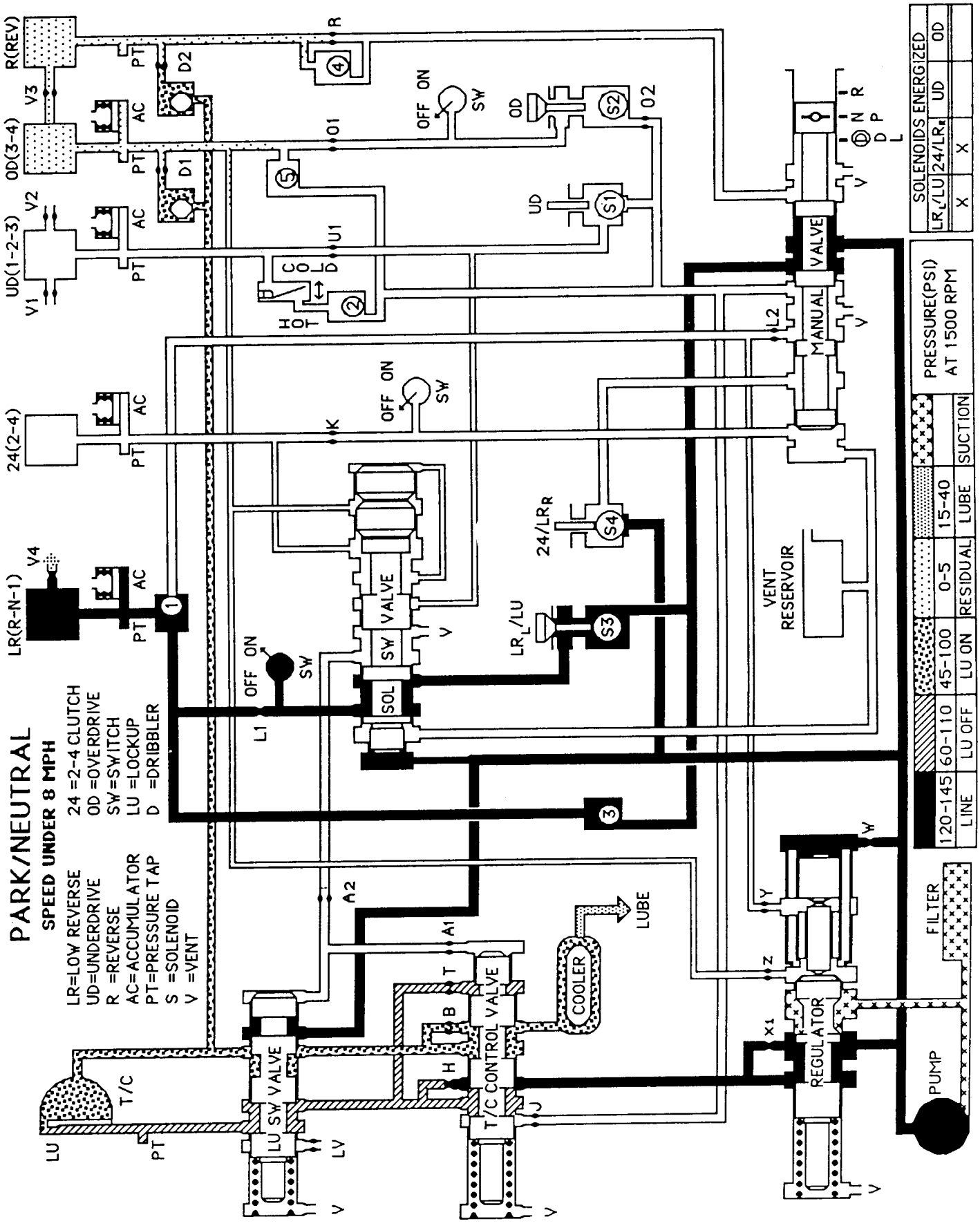
PARK/NEUTRAL
SPEED UNDER 8 MPH
LR=LOW REVERSE
UD=UNDERDRIVE
R =REVERSE
AC=ACCUMULATOR
PT=PRESSURE TAP
S =SOLENOID
V =VENT
24 =2-4 CLUTCH
OD =OVERDRIVE
SW=SWITCH
LU =LOCKUP
D =DRIBBLER
R(REV)
OD(3-4)
UD(1-2-3)
24(2-4)
LR(R-N-1)
V1
V2
V3
V4
AC
PT
D1
D2
OFF ON
SW
VALVE
SOL
MANUAL
REGULATOR
COOLER
LUBE
FILTER
PUMP
VENT
RESERVOIR
T/C
LU SW VALVE
T/C CONTROL VALVE
SOLENOIDS ENERGIZED
LR/LU 24/LR UD OD
X X
PRESSURE(PSI)
AT 1500 RPM
LINE 120-145
LU OFF 60-110
LU ON 45-100
RESIDUAL 0-5
LUBE 15-40
SUCTION

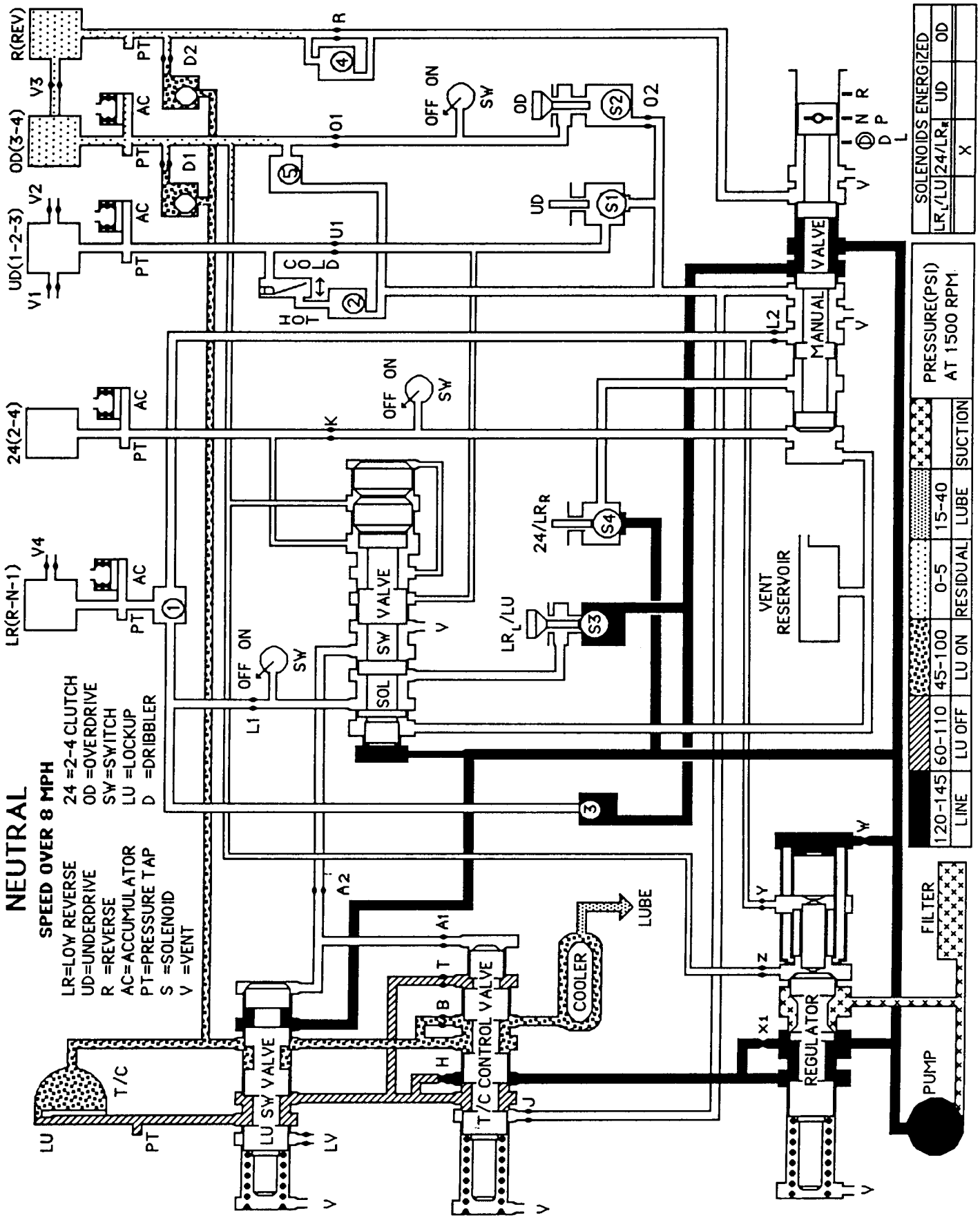
NEUTRAL
SPEED OVER 8 MPH
LR=LOW REVERSE
UD=UNDERDRIVE
R =REVERSE
AC=ACCUMULATOR
PT=PRESSURE TAP
S =SOLENOID
V =VENT
24 =2-4 CLUTCH
OD =OVERDRIVE
SW=SWITCH
LU =LOCKUP
D =DRIBBLER
R(REV)
OD(3-4)
UD(1-2-3)
24(2-4)
LR(R-N-1)
V1
V2
V3
V4
PT
AC
D1
D2
OFF ON
SW
OD
UD
S1
S2
S3
S4
24/LR_R
LR_L/LU
SOL
VALVE
MANUAL
VENT RESERVOIR
LU SW VALVE
T/C CONTROL VALVE
COOLER
LUBE
REGULATOR
FILTER
PUMP
T/C
LU
LV
SOLENOIDS ENERGIZED
LR_L/LU
24/LR_R
UD
OD
X
PRESSURE(PSI) AT 1500 RPM
120-145
LINE
60-110
LU OFF
45-100
LU ON
0-5
RESIDUAL
15-40
LUBE
SUCTION

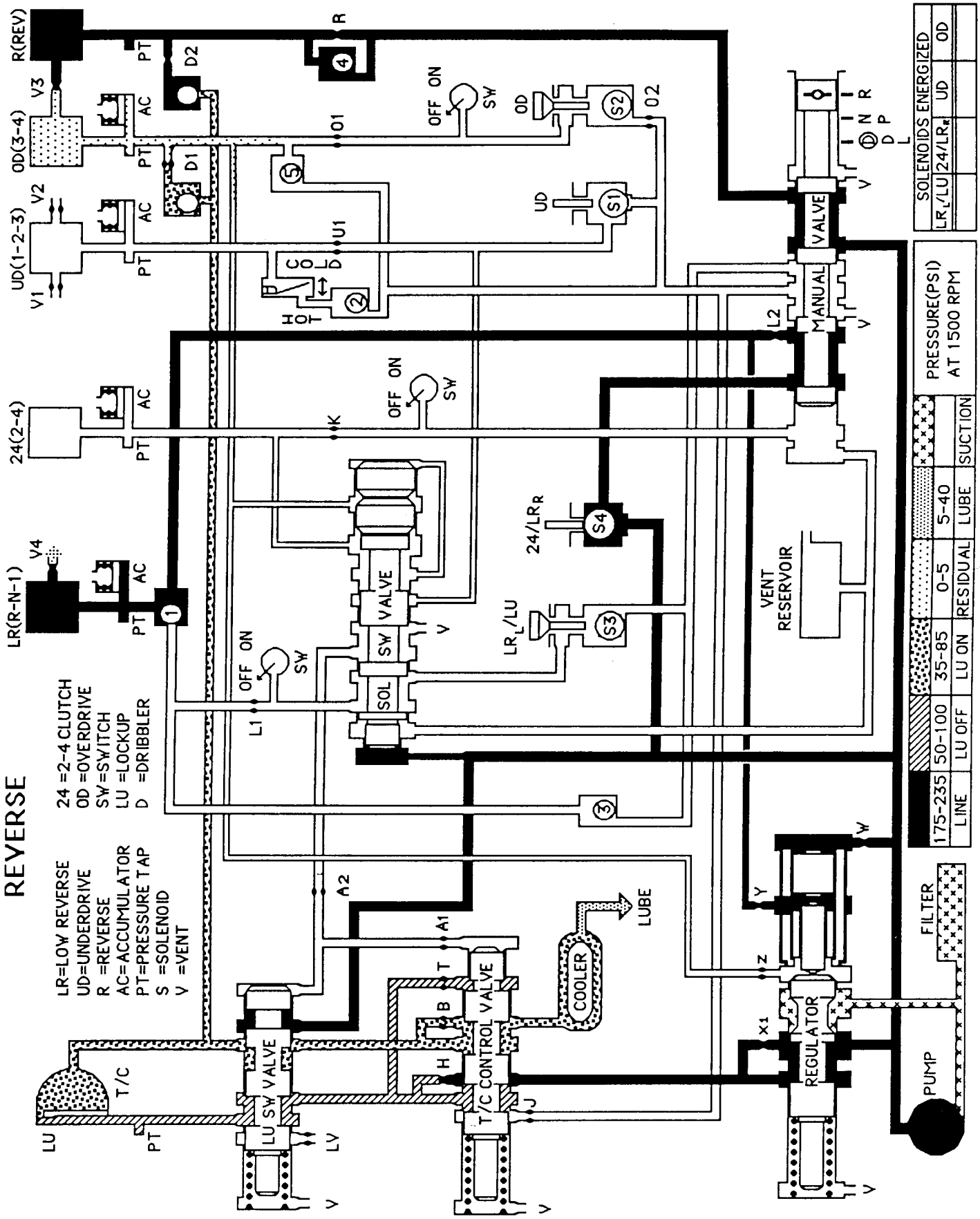
REVERSE
LR=LOW REVERSE
UD=UNDERDRIVE
R =REVERSE
AC=ACCUMULATOR
PT=PRESSURE TAP
S =SOLENOID
V =VENT
24 =2-4 CLUTCH
OD =OVERDRIVE
SW=SWITCH
LU =LOCKUP
D =DRIBBLER
R(REV)
OD(3-4)
UD(1-2-3)
24(2-4)
LR(R-N-1)
V1
V2
V3
V4
AC
PT
D1
D2
OFF ON
SW
VALVE
SOL
MANUAL
VENT
RESERVOIR
COOLER
LUBE
FILTER
PUMP
REGULATOR
T/C
LU SW VALVE
T/C CONTROL VALVE
SOLENOIDS ENERGIZED
LR/LU
24/LR
UD
OD
PRESSURE(PSI)
AT 1500 RPM
LINE
175-235
LU OFF
50-100
LU ON
35-85
RESIDUAL
0-5
LUBE
5-40
SUCTION

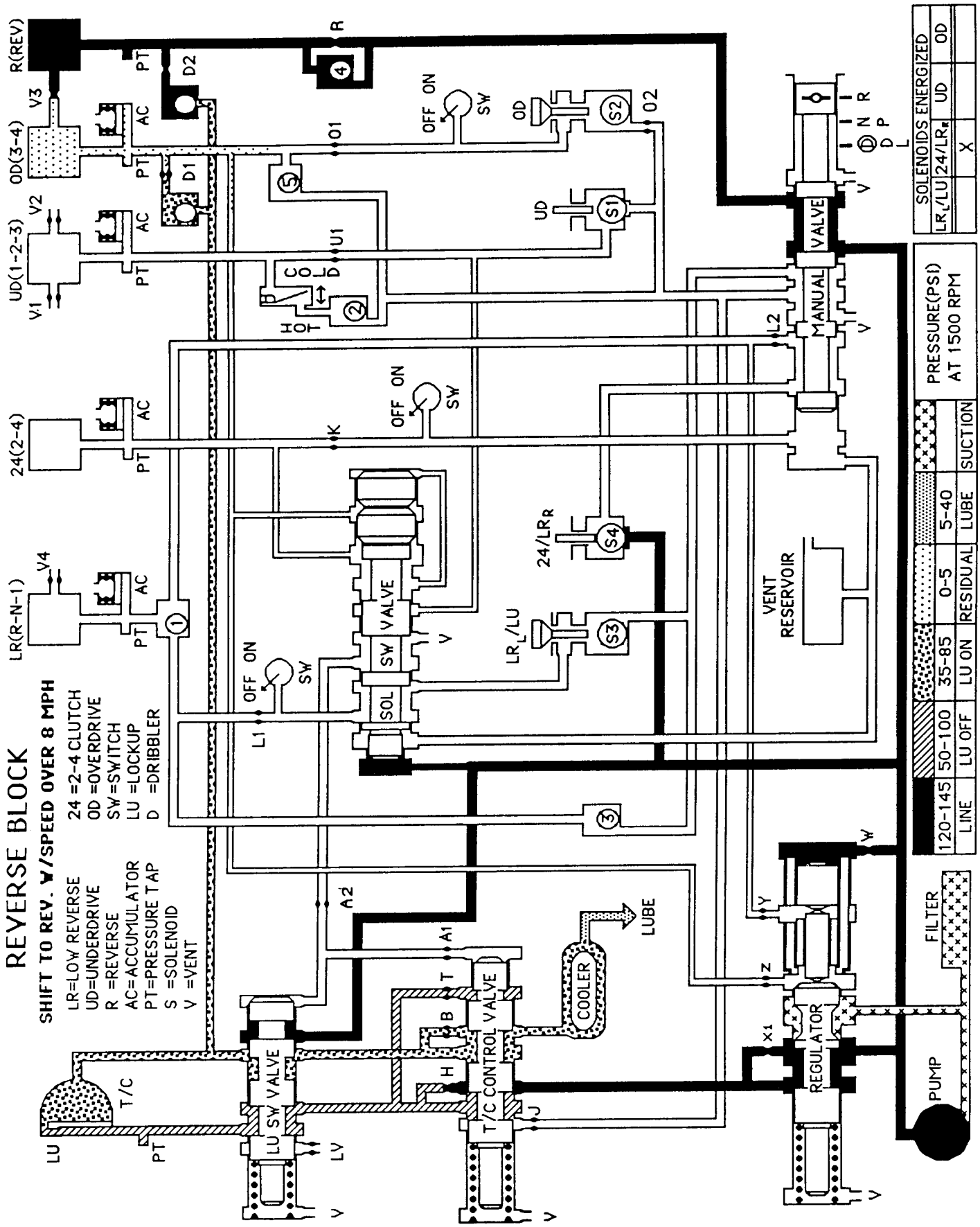
REVERSE BLOCK
SHIFT TO REV. W/SPEED OVER 8 MPH
LR=LOW REVERSE
UD=UNDERDRIVE
R =REVERSE
AC=ACCUMULATOR
PT=PRESSURE TAP
S =SOLENOID
V =VENT
24 =2-4 CLUTCH
OD =OVERDRIVE
SW=SWITCH
LU =LOCKUP
D =DRIBBLER
R(REV)
OD(3-4)
UD(1-2-3)
24(2-4)
LR(R-N-1)
V1
V2
V3
V4
PT
AC
D1
D2
R
O1
O2
U1
K
L1
L2
OFF ON
SW
OD
UD
S1
S2
S3
S4
24/LR
LR/LU
SOL
VALVE
COLD
HOT
MANUAL
VALVE
VENT
RESERVOIR
LU
T/C
LU SW VALVE
LV
T/C CONTROL VALVE
COOLER
LUBE
REGULATOR
PUMP
FILTER
SOLENOIDS ENERGIZED
LR/LU
24/LR
UD
OD
X
PRESSURE(PSI)
AT 1500 RPM
120-145
LINE
50-100
LU OFF
35-85
LU ON
0-5
RESIDUAL
5-40
LUBE
SUCTION

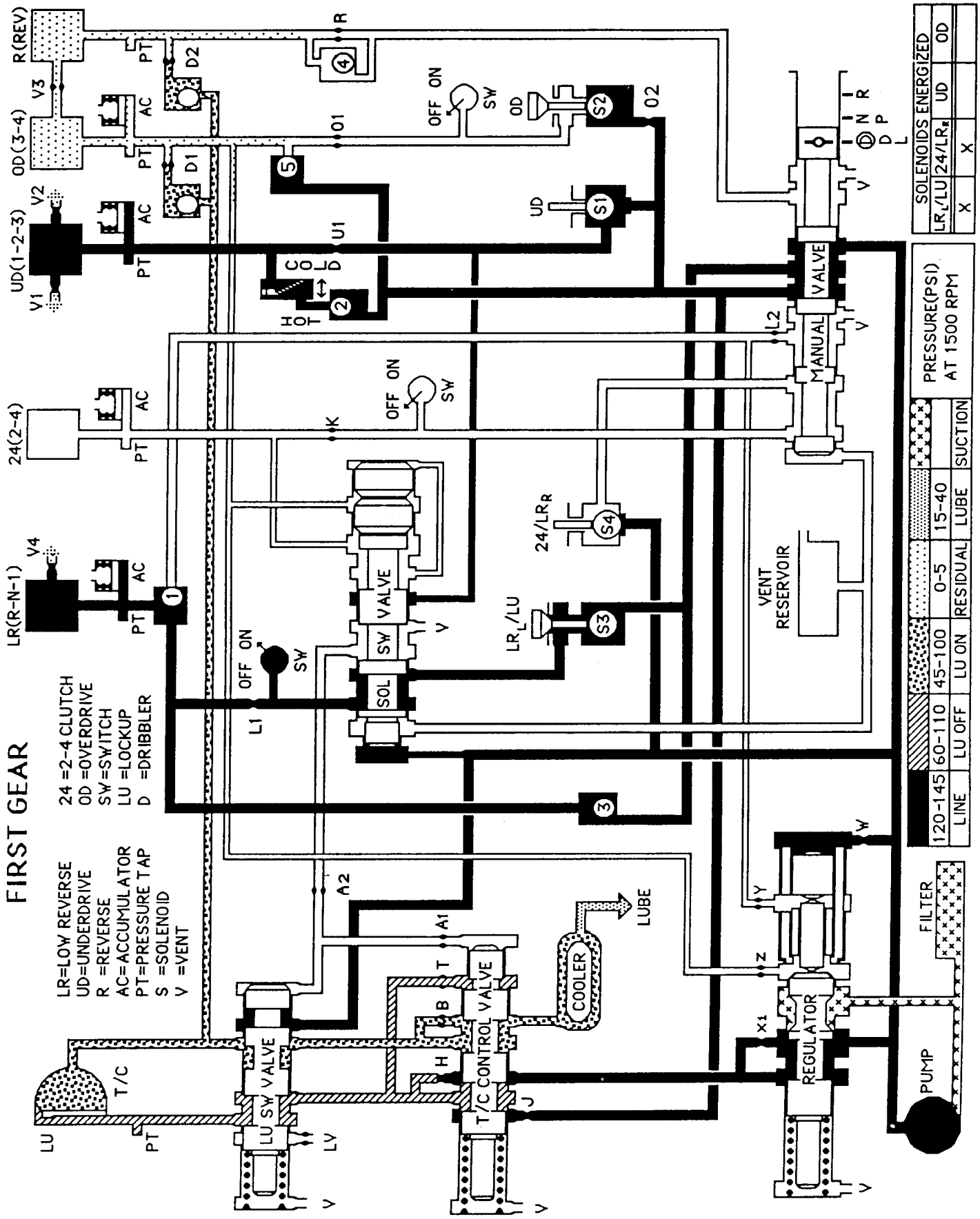
FIRST GEAR
LR=LOW REVERSE
UD=UNDERDRIVE
R =REVERSE
AC=ACCUMULATOR
PT=PRESSURE TAP
S =SOLENOID
V =VENT
24 =2-4 CLUTCH
OD =OVERDRIVE
SW=SWITCH
LU =LOCKUP
D =DRIBBLER
R(REV)
OD(3-4)
UD(1-2-3)
24(2-4)
LR(R-N-1)
V1
V2
V3
V4
AC
PT
D1
D2
OFF ON SW
SOL
VALVE
MANUAL VALVE
VENT RESERVOIR
COOLER
LUBE
FILTER
PUMP
REGULATOR
T/C
LU SW VALVE
T/C CONTROL VALVE
SOLENOIDS ENERGIZED
PRESSURE(PSI) AT 1500 RPM
LINE
LU OFF
LU ON
RESIDUAL
LUBE
SUCTION

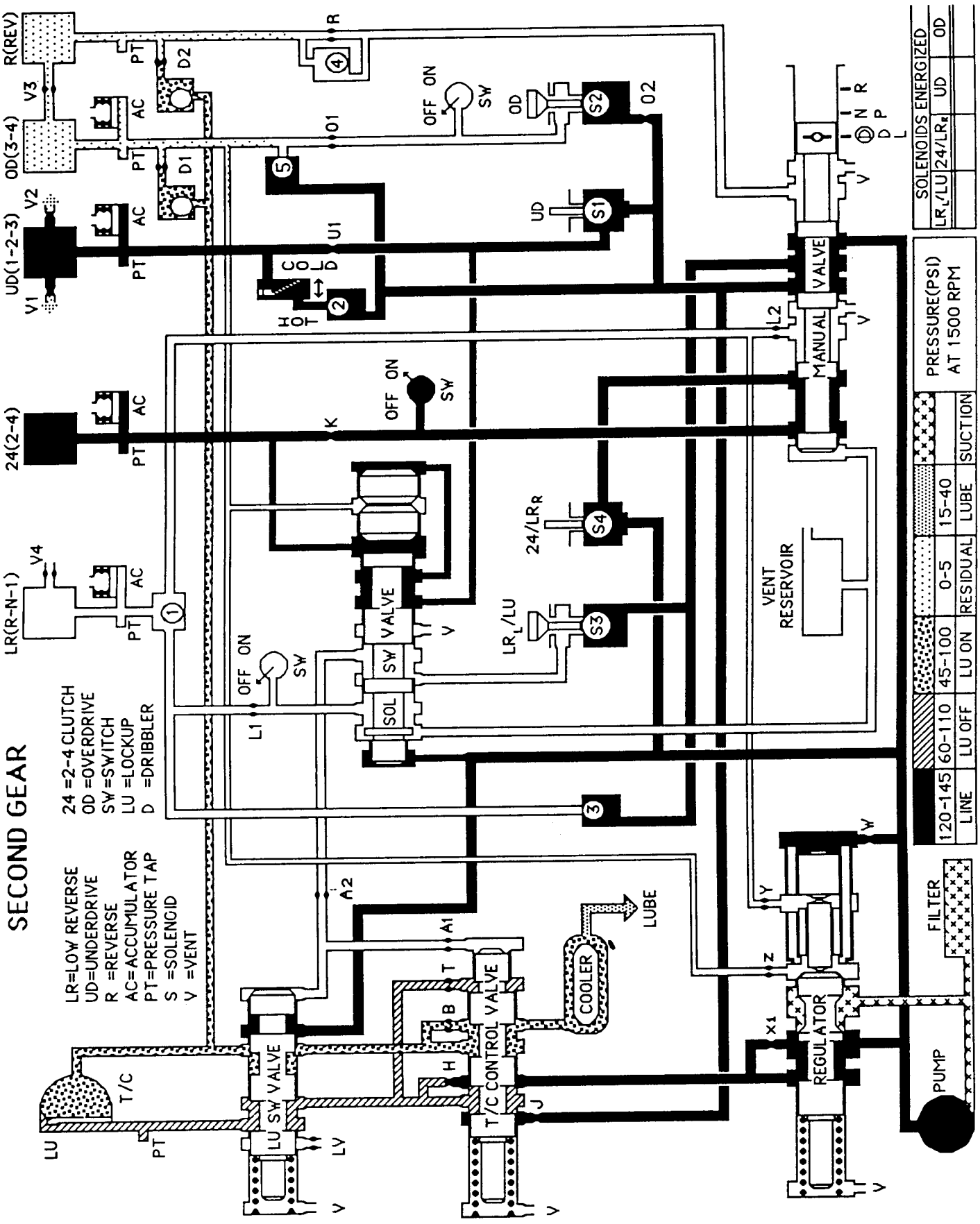
SECOND GEAR
LR=LOW REVERSE
UD=UNDERDRIVE
R =REVERSE
AC=ACCUMULATOR
PT=PRESSURE TAP
S =SOLENOID
V =VENT
24 =2-4 CLUTCH
OD =OVERDRIVE
SW=SWITCH
LU =LOCKUP
D =DRIBBLER
R(REV)
OD(3-4)
UD(1-2-3)
24(2-4)
LR(R-N-1)
V1
V2
V3
V4
D1
D2
AC
PT
OFF ON
SW
VALVE
SOL
MANUAL
VENT
RESERVOIR
COOLER
LUBE
FILTER
PUMP
REGULATOR
T/C
T/C CONTROL VALVE
LU SW VALVE
SOLENOIDS ENERGIZED
LR/LU
24/LR
UD
OD
PRESSURE(PSI)
AT 1500 RPM
LINE
LU ON
RESIDUAL
LUBE
SUCTION
120-145
60-110
45-100
0-5
15-40

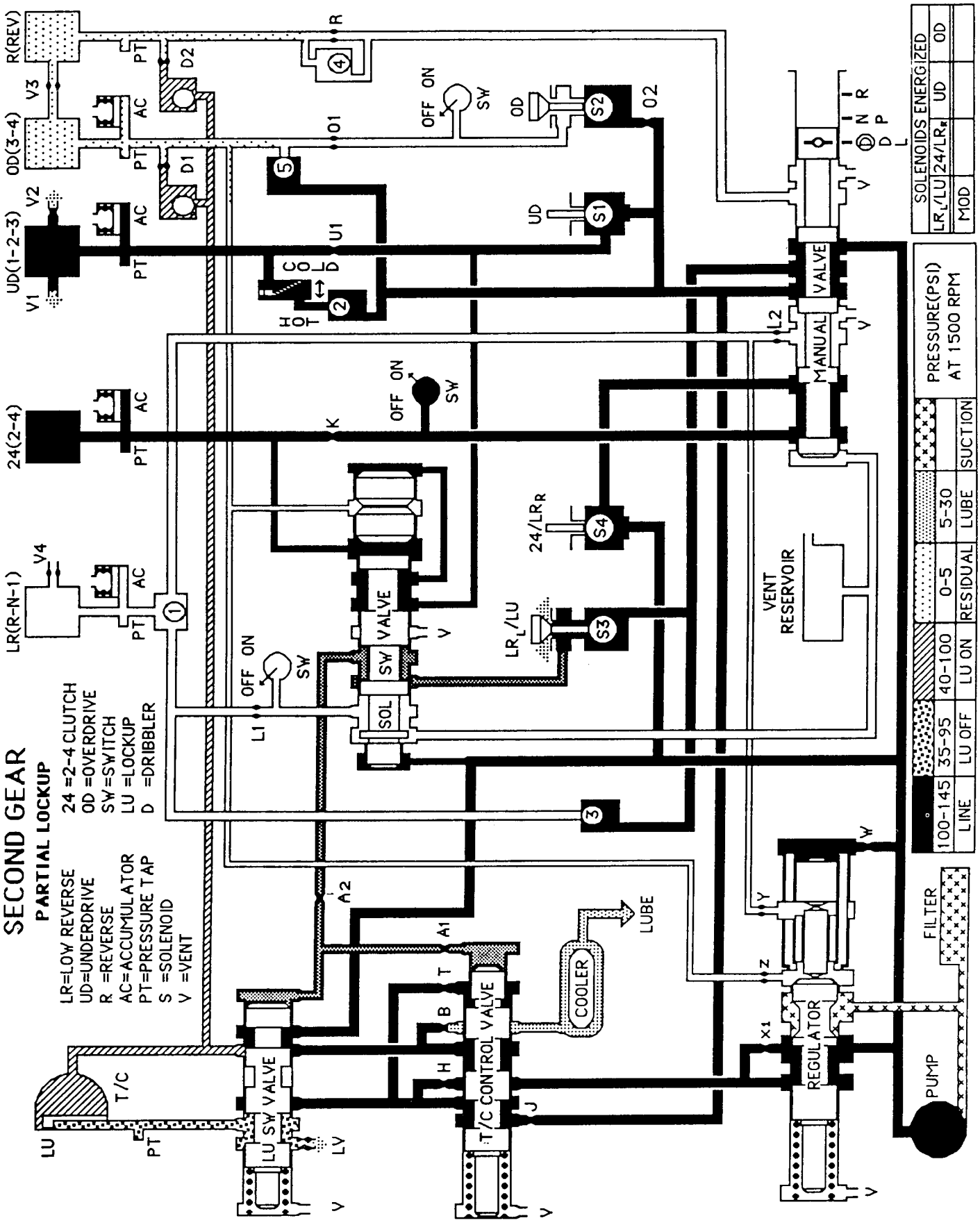
SECOND GEAR
PARTIAL LOCKUP
LR=LOW REVERSE
UD=UNDERDRIVE
R =REVERSE
AC=ACCUMULATOR
PT=PRESSURE TAP
S =SOLENOID
V =VENT
24 =2-4 CLUTCH
OD =OVERDRIVE
SW=SWITCH
LU =LOCKUP
D =DRIBBLER
R(REV)
OD(3-4)
UD(1-2-3)
24(2-4)
LR(R-N-1)
V1
V2
V3
V4
AC
PT
D1
D2
OFF ON SW
SOL
VALVE
MANUAL VALVE
VENT RESERVOIR
COOLER
LUBE
FILTER
PUMP
REGULATOR
T/C CONTROL VALVE
T/C
LU SW VALVE
SOLENOIDS ENERGIZED
OD
UD
24/LR
LR/LU
MOD
PRESSURE(PSI) AT 1500 RPM
SUCTION
LUBE
RESIDUAL
0-5
5-30
LU ON
40-100
LU OFF
35-95
LINE
100-145

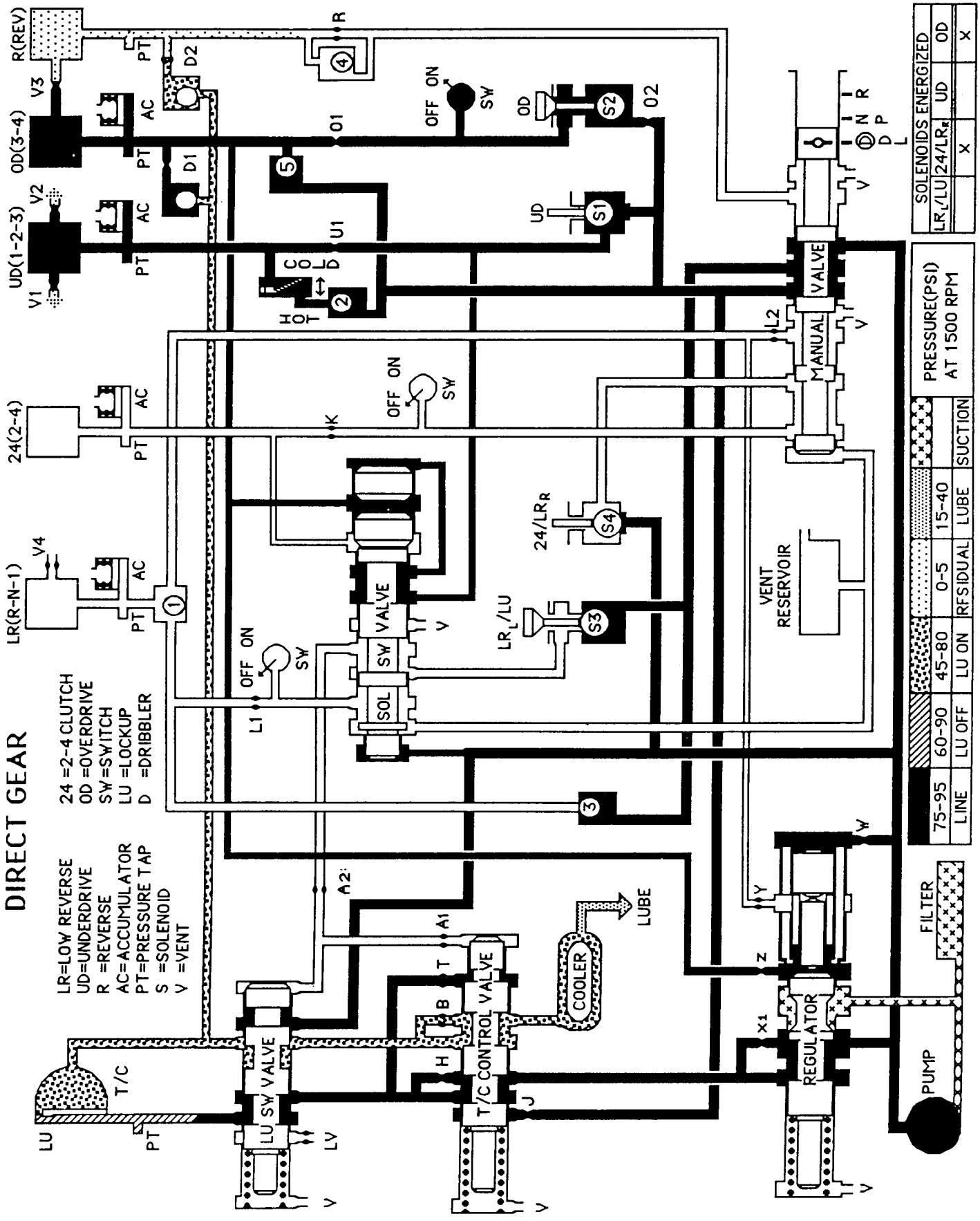
DIRECT GEAR
LR=LOW REVERSE
UD=UNDERDRIVE
R =REVERSE
AC=ACCUMULATOR
PT=PRESSURE TAP
S =SOLENOID
V =VENT
24 =2-4 CLUTCH
OD =OVERDRIVE
SW=SWITCH
LU =LOCKUP
D =DRIBBLER
R(REV)
OD(3-4)
UD(1-2-3)
24(2-4)
LR(R-N-1)
V1
V2
V3
V4
PT
AC
D1
D2
O1
O2
U1
OFF ON
SW
OD
UD
S1
S2
S3
S4
COLD
HOT
MANUAL VALVE
L2
K
24/LR_R
LR_L/LU
SOL SW VALVE
L1
VENT RESERVOIR
A2
A1
T
B
H
J
T/C CONTROL VALVE
COOLER
LUBE
LU SW VALVE
LU
T/C
LV
V
W
Y
Z
X1
REGULATOR
PUMP
FILTER
N R
D P
L
SOLENOIDS ENERGIZED
LR_L/LU
24/LR_R
UD
OD
X
PRESSURE(PSI) AT 1500 RPM
75-95
LINE
60-90
LU OFF
45-80
LU ON
0-5
RFSIDUAL
15-40
LUBE
SUCTION

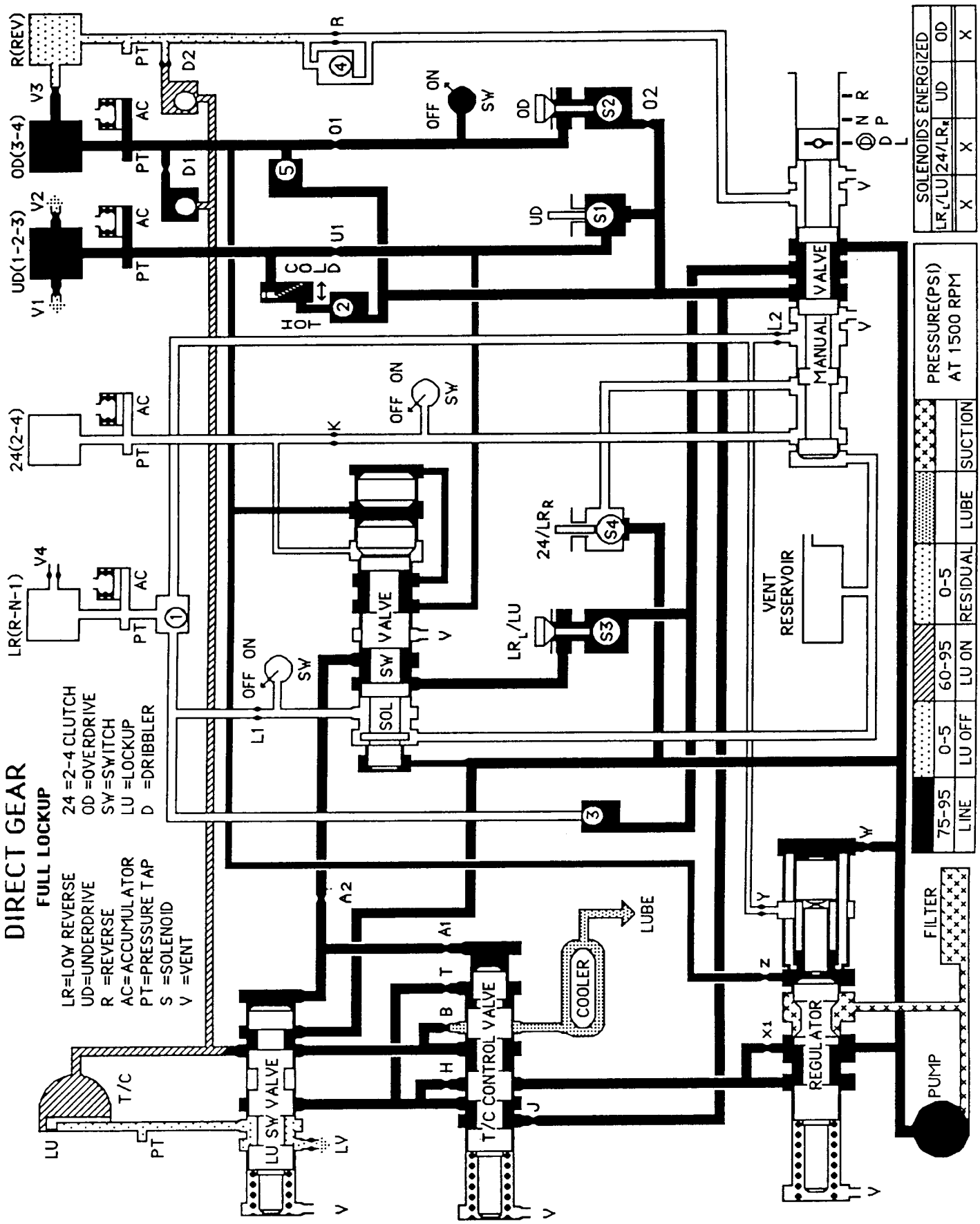
DIRECT GEAR
FULL LOCKUP
LR=LOW REVERSE
UD=UNDERDRIVE
R =REVERSE
AC=ACCUMULATOR
PT=PRESSURE TAP
S =SOLENOID
V =VENT
24 =2-4 CLUTCH
OD =OVERDRIVE
SW=SWITCH
LU =LOCKUP
D =DRIBBLER
R(REV)
OD(3-4)
UD(1-2-3)
24(2-4)
LR(R-N-1)
V1
V2
V3
V4
PT
AC
D1
D2
O1
O2
U1
OFF ON
SW
OD
UD
S1
S2
S3
S4
COLD
HOT
MANUAL VALVE
L2
K
24/LR_R
LR_L/LU
SOL SW VALVE
L1
VENT RESERVOIR
A1
A2
T
B
H
J
T/C CONTROL VALVE
COOLER
LUBE
LU SW VALVE
LV
T/C
LU
X1
Z
Y
W
REGULATOR
PUMP
FILTER
SOLENOIDS ENERGIZED
LR_L/LU
24/LR_R
UD
OD
X
PRESSURE(PSI) AT 1500 RPM
75-95
LINE
0-5
LU OFF
60-95
LU ON
0-5
RESIDUAL
LUBE
SUCTION

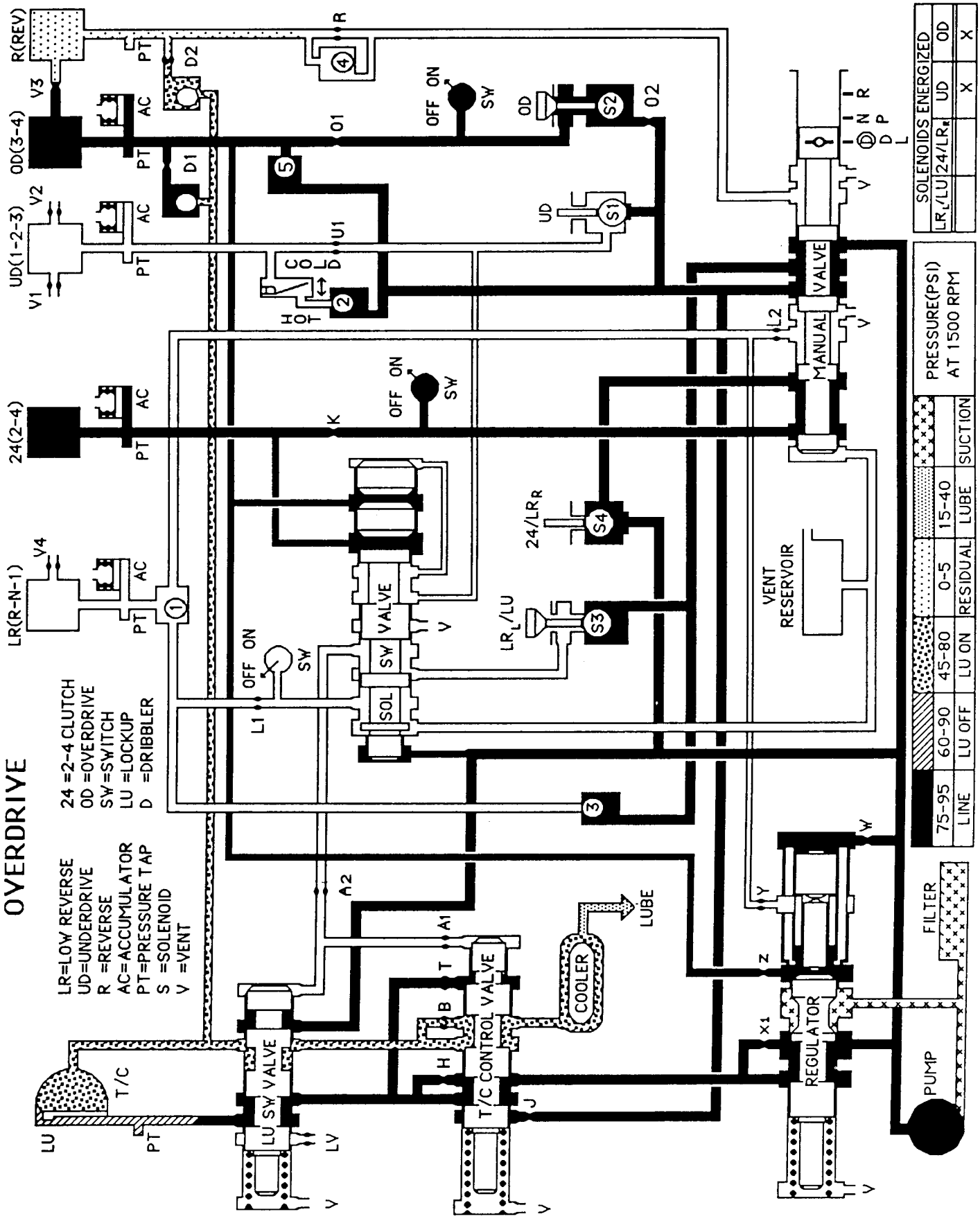
OVERDRIVE
LR=LOW REVERSE
UD=UNDERDRIVE
R =REVERSE
AC=ACCUMULATOR
PT=PRESSURE TAP
S =SOLENOID
V =VENT
24 =2-4 CLUTCH
OD =OVERDRIVE
SW=SWITCH
LU =LOCKUP
D =DRIBBLER
R(REV)
OD(3-4)
UD(1-2-3)
24(2-4)
LR(R-N-1)
V1
V2
V3
V4
PT
AC
D1
D2
O1
O2
U1
K
L1
L2
OFF ON
SW
OD
UD
S1
S2
S3
S4
COLD
HOT
MANUAL VALVE
VENT RESERVOIR
SOL SW VALVE
24/LR_R
LR_L/LU
LU SW VALVE
T/C CONTROL VALVE
COOLER
LUBE
REGULATOR
PUMP
FILTER
T/C
LU
LV
A1
A2
B
H
J
T
W
X1
Y
Z
SOLENOIDS ENERGIZED
LR_L/LU
24/LR_R
UD
OD
X
PRESSURE(PSI) AT 1500 RPM
75-95
LINE
60-90
LU OFF
45-80
LU ON
0-5
RESIDUAL
15-40
LUBE
SUCTION

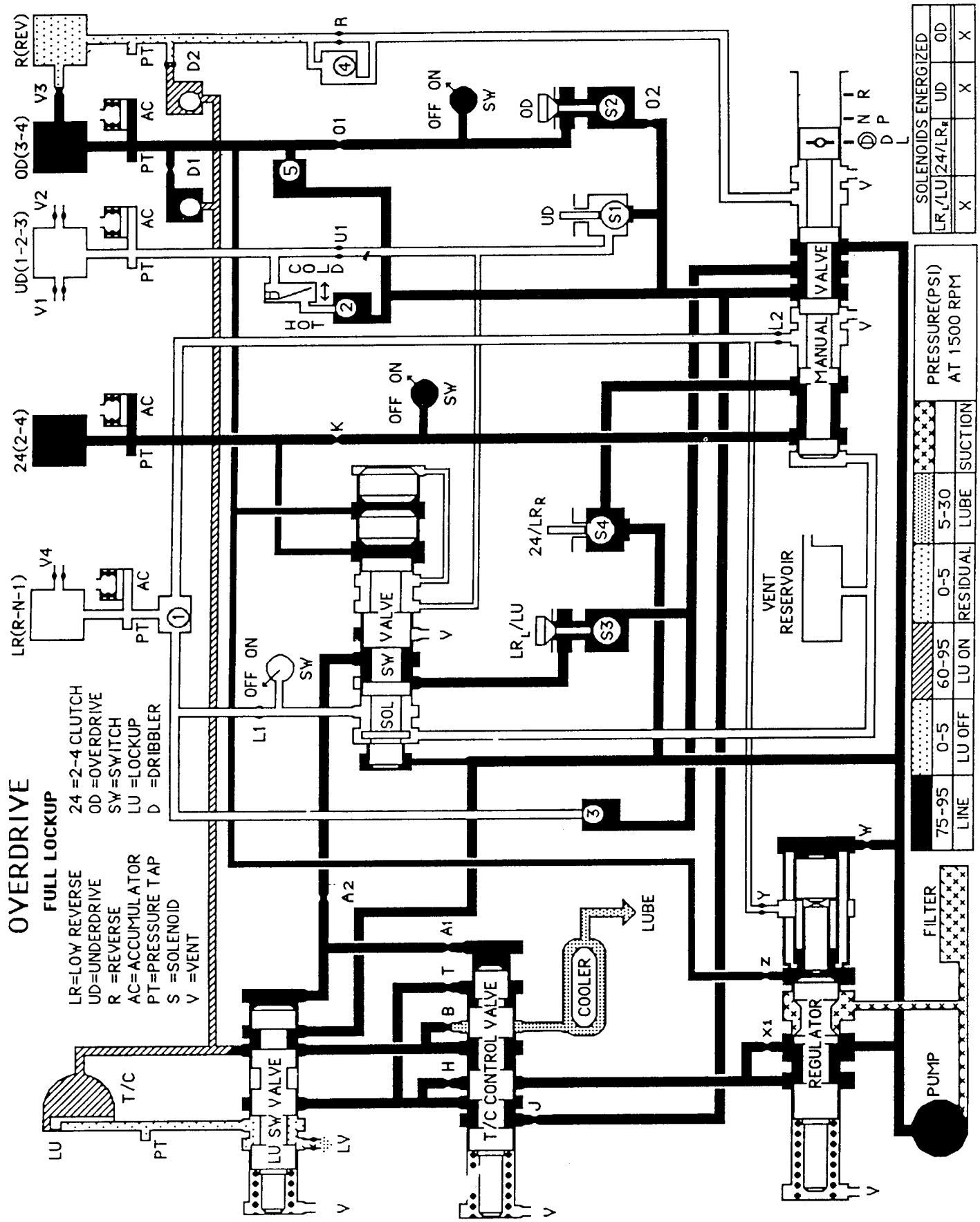
OVERDRIVE
FULL LOCKUP
LR=LOW REVERSE
UD=UNDERDRIVE
R =REVERSE
AC=ACCUMULATOR
PT=PRESSURE TAP
S =SOLENOID
V =VENT
24 =2-4 CLUTCH
OD =OVERDRIVE
SW=SWITCH
LU =LOCKUP
D =DRIBBLER
R(REV)
OD(3-4)
UD(1-2-3)
LR(R-N-1)
24(2-4)
V1
V2
V3
V4
AC
PT
D1
D2
OFF ON
SW
VALVE
SOL
MANUAL
VENT
RESERVOIR
COOLER
LUBE
FILTER
PUMP
REGULATOR
T/C CONTROL VALVE
T/C
LU SW VALVE
SOLENOIDS ENERGIZED
LR/LU
24/LR
UD
OD
PRESSURE(PSI)
AT 1500 RPM
LINE
LU OFF
LU ON
RESIDUAL
LUBE
SUCTION
75-95
60-95
0-5
5-30

TORQUE CONVERTER STALL TEST

WARNING: Do not let anyone stand in front of vehicle during test.

The stall test consists of determining the engine speed obtained at full throttle in "D" position only, with the front wheels blocked. This test checks the torque converted stator clutch operation, and the holding ability of the transaxle clutch. The transaxle oil level should be checked and the engine brought to normal operating temperature before stall operation. **Both the parking and service brakes must be fully applied and front wheels blocked while making this test.**

Do not hold the throttle open any longer than is necessary to obtain a maximum engine speed reading, and never longer than five seconds at a time. If more than one stall check is required, operate the engine at approximately 1,000 rpm in neutral for 20 seconds to cool the transmission fluid between runs. If engine speeds exceeds the maximum limits shown, release the accelerator immediately since transaxle clutch slippage is indicated.

Stall Speed Above Specification

If stall speeds exceeds the maximum specified in chart by more than 200 rpm, transaxle clutch slippage is indicated. Follow the transaxle oil pressure and air pressure checks outlined in this section to determine the cause of slippage.

Stall Speed Below Specification

Low stall speeds with a properly tuned engine indicate torque converter stator clutch problems. A road test will be necessary to identify the exact problem.

If stall speeds are 250-350 rpm below minimum specification, and the vehicle operates properly at highway speeds, but has poor through-gear acceleration, the stator overrunning clutch is slipping.

If stall speed and acceleration are normal, but abnormally high throttle opening is required to maintain highway speeds, the stator clutch has seized.

Both of these stator defects require replacement of the torque converter.

Noise

A whining or siren-like noise due to fluid flow is normal during stall operation with some torque converters; however, loud metallic noises from loose parts or interference within the assembly indicate a defective torque converter. To confirm that the noise originates with the torque converter, operate the vehicle at light throttle in D and N on a hoist and listen under the transaxle bell housing.

CLUTCH AIR PRESSURE TESTS

Clutch Air Pressure Checks

Inoperative clutches can be located using a series of tests by substituting air pressure for fluid pressure (Figs. 2 and 3). The clutches may be tested by applying air pressure to their respective passages after the valve body has been removed and Tool 6056 has been installed. To make air pressure tests, proceed as follows:

The compressed air supply must be free of all dirt and moisture. Use a pressure of 30 PSI.

Remove oil pan and valve body. (See Valve body removal.)

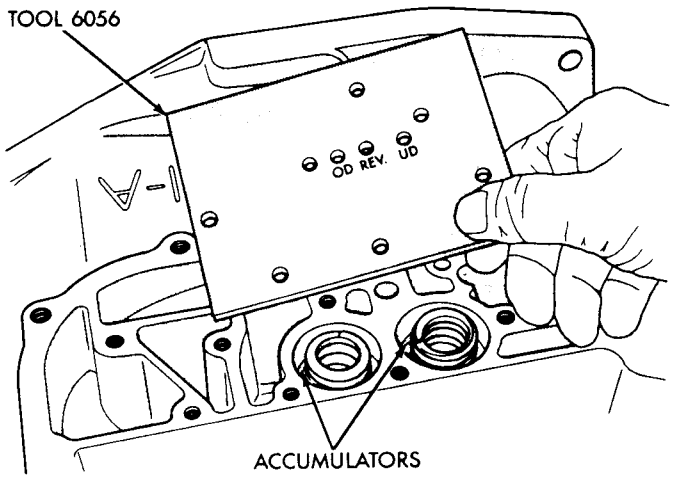

Fig. 2—Air Pressure Test Plate

Overdrive Clutch

Apply air pressure to the overdrive clutch apply passage and watch for the push/pull piston to move forward. The piston should return to its starting position when the air pressure is removed.

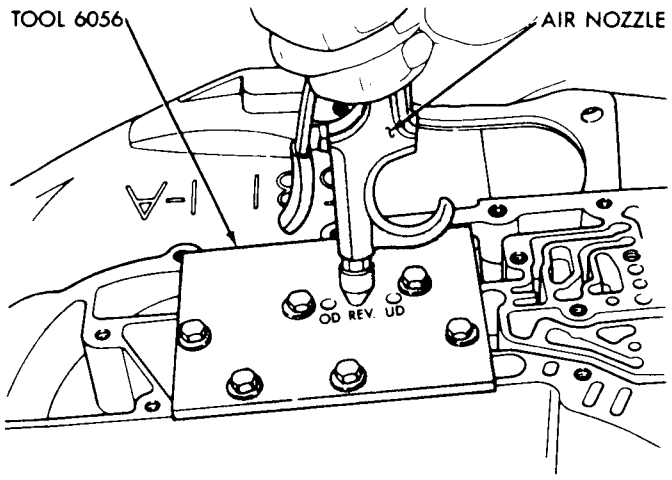

Fig. 3—Testing Reverse Clutch

Reverse Clutch

Apply air pressure to the reverse clutch apply passage and watch for the push/pull piston to move rearward. The piston should return to its starting position when the air pressure is removed.

2/4 Clutch

Apply air pressure to the feed hole located on the 2/4 clutch retainer. Look in the area where the 2/4 piston contacts the first separator plate and watch carefully for the 2/4 piston to move rearward. The piston should return to its original position after the air pressure is removed.

Low/Reverse Clutch

Apply air pressure to the low/reverse clutch feed hole (rear of case, between 2 bolt holes). Then, look in the area where the low/reverse piston contacts the first separator plate and watch carefully for the piston to move forward. The piston should return to its original position after the air pressure is removed.

Underdrive Clutch

Because this clutch piston can not be seen, its operation is checked by function. Air pressure is applied to the low/reverse and the 2/4 clutches. This locks the output shaft. Use a piece of rubber hose wrapped around the input shaft and a pair of clamp-on pliers to turn the input shaft. Next apply air pressure to the underdrive clutch. The input shaft should not rotate with hand torque. Release the air pressure and confirm that the input shaft will rotate.

FLUID LEAKAGE—TRANSAXLE TORQUE CONVERTER HOUSING AREA

(1) Check for Source of Leakage.

Since fluid leakage at or around the torque converter area may originate from an engine oil leak, the area should be examined closely. Factory fill fluid is dyed red and, therefore, can be distinguished from engine oil.

(2) Prior to removing the transaxle, perform the following checks:

When leakage is determined to originate from the transaxle, check fluid level prior to removal of the transaxle and torque converter.

High oil level can result in oil leakage out the vent in the manual shaft. If the fluid level is high, adjust to proper level.

After performing this operation, inspect for leakage. If a leak persists, perform the following operation on the vehicle to determine if it is the torque converter or transaxle that is leaking.

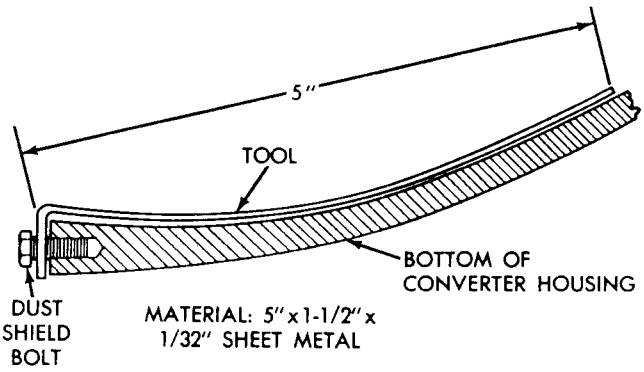

Fig. 4—Leak Locating Test Probe Tool

Leakage Test Probe

(1) Remove torque converter housing dust shield.

(2) Clean the inside of torque converter housing (lower area) as dry as possible. A solvent spray followed by compressed air drying is preferable.

(3) Fabricate and fasten test probe (Fig. 4) securely to convenient dust shield bolt hole. Make certain torque converter is cleared by test probe. Tool must be clean and dry.

(4) Run engine at approximately 2,500 rpm with transaxle in neutral, for about 2 minutes. Transaxle must be at operating temperature.

(5) Stop engine and carefully remove tool.

(6) If upper surface of test probe is dry, there is no torque converter leak. A path of fluid across probe indicates a torque converter leak. Oil leaking under the probe is coming from the transaxle torque converter area.

(7) Remove transaxle and torque converter assembly from vehicle for further investigation. The fluid should be drained from the transaxle. Reinstall oil pan (with RTV sealant) at specified torque.

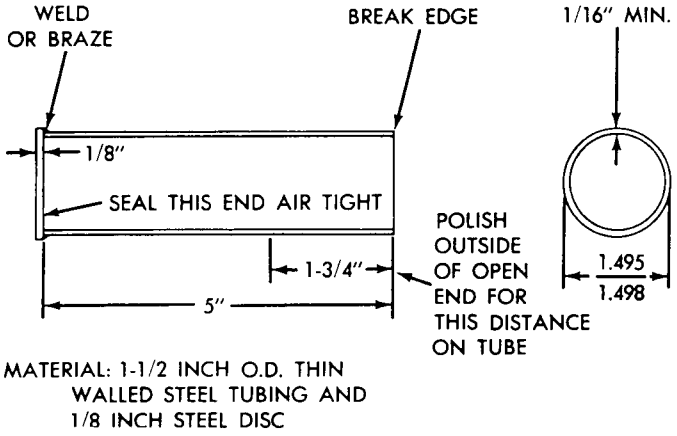

Fig. 5—Torque Converter Hub Seal Cup

Possible sources of transaxle torque converter area fluid leakage are:

(1) Torque converter hub seal.

(a) Seal lip cut, check torque converter hub finish.

(b) Bushing moved and/or worn.

(c) Oil return hole in pump housing plugged or omitted.

(d) Seal worn out (high-mileage vehicles).

(2) Fluid leakage at the outside diameter from pump housing O-ring.

(3) Fluid leakage at the front pump to case bolts. Check condition of washers on bolts and use new bolts, if necessary.

(4) Fluid leakage due to case or front pump housing porosity.

Torque Converter Leakage

Possible sources of torque converter leakage are:

(a) Torque converter weld leaks at the outside diameter (peripheral) weld.

(b) Torque converter hub weld.

Hub weld is inside and not visible. Do not attempt to repair. Replace torque converter.

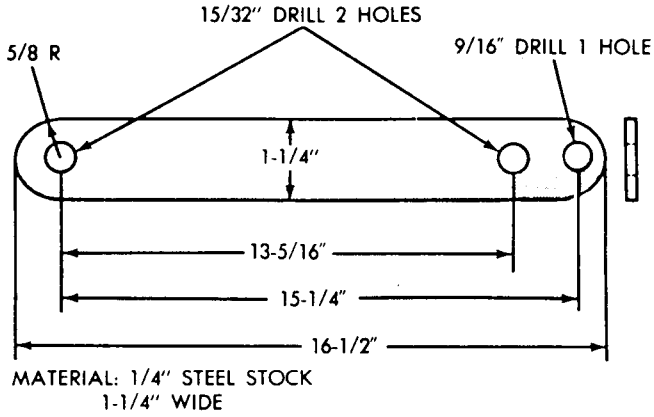

Fig. 6—Hub Seal Cup Retaining Strap

Air Pressure Test of Transaxle

Fabricate equipment needed for test as shown in figures 5 and 6.

The transaxle should be prepared for pressure test as follows after removal of the torque converter:

(1) Install a dipstick bore plug and plug oil cooler line fitting.

(2) With rotary motion, install converter hub seal cup over input shaft, and through the converter hub seal until the cup bottoms against the pump gear lugs. Secure with cup retainer strap (Fig. 6) using starter upper hole and opposite bracket hole.

(3) Attach and clamp hose from nozzle of Tool C-4080 to the upper cooler line fitting position in case.

CAUTION: Do not, under any circumstances, pressurize a transaxle to more than 10 psi.

(4) Pressurize the transaxle using Tool C-4080 until the pressure gauge reads 8 psi. Position transaxle so that pump housing and case front may be covered with soapy solution of water. Leaks are sometimes caused by porosity in the case or pump housing.

If a leak source is located, that part and all associated seals, O-rings, and gaskets should be replaced with new parts.

DIAGNOSIS GUIDE-ABNORMAL NOISE

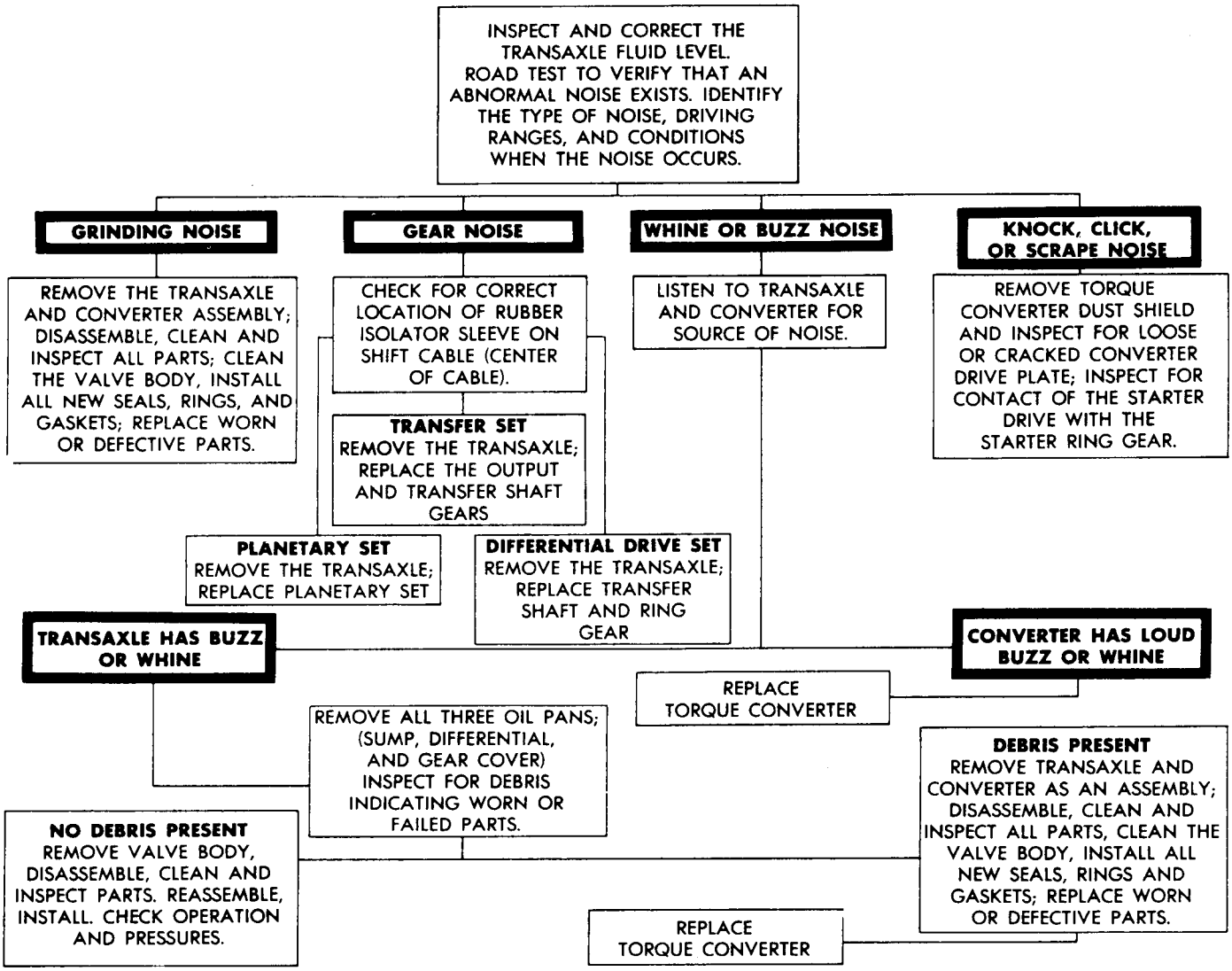

DIAGNOSIS GUIDE-VEHICLE WILL NOT MOVE

CHECK THE TRANSAXLE FLUID LEVEL BEFORE STARTING THE ENGINE. IF NO FLUID IS VISIBLE ON THE DIPSTICK, ADD FLUID TO THE "ADD" MARK BEFORE STARTING THE ENGINE. THEN START THE ENGINE WITH THE TRANSAXLE IN NEUTRAL AND LISTEN FOR NOISE.

ABNORMAL NOISE, STOP ENGINE IMMEDIATELY, REMOVE THE TRANSAXLE AND CONVERTER AS AN ASSEMBLY. DISASSEMBLE, CLEAN AND INSPECT ALL PARTS. CLEAN VALVE BODY; INSTALL ALL NEW SEALS, RINGS AND GASKETS; REPLACE WORN OR DEFECTIVE PARTS.

NO ABNORMAL NOISE, MOVE THE SELECTOR TO A FORWARD DRIVE RANGE AND OBSERVE THE FRONT WHEELS FOR TURNING

DRIVE SHAFTS TURN BUT FRONT WHEELS DO NOT TURN, INSPECT FOR BROKEN DRIVE SHAFT PARTS.

DRIVE SHAFTS DO NOT TURN

REMOVE ALL THREE OIL PANS. INSPECT FOR DEBRIS AND IF AXLE SHAFTS ARE PROPERLY INSTALLED.

NO DEBRIS. REMOVE VALVE BODY. DISASSEMBLE, CLEAN AND INSPECT ALL PARTS. REASSEMBLE, INSTALL AND CHECK PRESSURES AND OPERATION.

DEBRIS IS PRESENT. REMOVE TRANSAXLE AND CONVERTER AS AN ASSEMBLY; DISASSEMBLE, CLEAN AND INSPECT ALL PARTS; CLEAN THE VALVE BODY. INSTALL ALL NEW SEALS, RINGS, AND GASKETS; REPLACE WORN OR DEFECTIVE PARTS.

REPLACE TORQUE CONVERTER FLUSH COOLER AND LINES

DIAGNOSIS GUIDE-FLUID LEAKS

VISUALLY INSPECT FOR SOURCE OF LEAK. IF THE SOURCE OF LEAK CANNOT BE READILY DETERMINED, CLEAN THE EXTERIOR OF THE TRANSAXLE. CHECK TRANSAXLE FLUID LEVEL. CORRECT IF NECESSARY.

THE FOLLOWING LEAKS MAY BE CORRECTED WITHOUT REMOVING THE TRANSAXLE:

MANUAL LEVER SHAFT OIL SEAL
PRESSURE GAUGE PLUGS
NEUTRAL START SWITCH
OIL PAN RTV
OIL COOLER FITTINGS
EXTENSION HOUSING TO CASE BOLTS
SPEEDOMETER ADAPTER "O" RING
FRONT BAND ADJUSTING SCREW
EXTENSION HOUSING AXLE SEAL
DIFFERENTIAL BEARING RETAINER AXLE SEAL
REAR END COVER RTV
DIFFERENTIAL COVER RTV
EXTENSION HOUSING "O" RING
DIFFERENTIAL BEARING RETAINER RTV

THE FOLLOWING LEAKS REQUIRE REMOVAL OF THE TRANSAXLE AND TORQUE CONVERTER FOR CORRECTION.

TRANSAXLE FLUID LEAKING FROM THE LOWER EDGE OF THE CONVERTER HOUSING; CAUSED BY FRONT PUMP SEAL, PUMP TO CASE SEAL, OR TORQUE CONVERTER WELD.

CRACKED OR POROUS TRANSAXLE CASE.

DIAGNOSIS CHART "B"

POSSIBLE CAUSE	HARSH ENGAGEMENT FROM NEUTRAL TO D	HARSH ENGAGEMENT FROM NEUTRAL TO R	DELAYED ENGAGEMENT FROM NEUTRAL TO D	DELAYED ENGAGEMENT FROM NEUTRAL TO R	POOR SHIFT QUALITY	SHIFTS ERRATIC	DRIVES IN NEUTRAL	DRAGS OR LOCKS	GRATING, SCRAPING, GROWLING NOISE	KNOCKING, NOISE	BUZZING NOISE	BUZZING NOISE DURING SHIFTS ONLY	HARD TO FILL, OIL BLOWS OUT FILLER TUBE	TRANSAXLE OVERHEATS	HARSH UPSHIFT	NO UPSHIFT INTO OVERDRIVE	NO LOCKUP	HARSH DOWNSHIFTS	HIGH SHIFT EFFORTS	HARSH LOCKUP SHIFT
Engine Performance	X	X				X									X			X		
Worn or faulty clutch(es)	X	X	X	X		X	X	X							X	X		X		
—Underdrive clutch	X		X			X	X	X										X		
—Overdrive clutch						X	X	X							X	X				
—Reverse clutch		X		X			X	X												
—2/4 clutch						X		X							X			X		
—Low/reverse clutch	X	X				X		X										X		
Clutch(es) dragging							X													
Insufficient clutch plate clearance							X							X						
Damaged clutch seals			X	X														X		
Worn or damaged accumulator seal ring(s)	X	X	X	X														X		
Faulty cooling system														X						
Engine coolant temp. too low																X	X			
Incorrect gearshift control linkage adjustment			X	X		X	X							X						
Shift linkage damaged																			X	
Chipped or damaged gear teeth								X	X											
Planetary gearsets broken or seized								X	X											
Bearings worn or damaged								X	X											
Driveshaft(s) bushing(s) worn or damaged									X											
Worn or broken reaction shaft support seal rings			X	X	X	X												X		
Worn or damaged input shaft seal rings			X	X													X			
Valve body malfunction or leakage	X	X	X	X	X	X	X				X						X	X	X	
Hydraulic pressures too low			X	X	X	X								X	X		X			
Hydraulic pressures too high	X	X													X			X		
Faulty oil pump			X	X		X								X			X			
Oil filter clogged			X	X	X	X							X							
Low fluid level			X	X	X	X					X			X			X	X		
High fluid level													X	X						
Aerated fluid			X	X	X	X					X		X	X			X	X		
Engine idle speed too low			X	X																
Engine idle speed too high	X	X												X				X		
Normal solenoid operation												X								
Solenoid sound cover loose												X								
Sticking lockup piston																				X

CONDITION

MAINTENANCE AND ADJUSTMENTS

LUBRICATION

Inspect fluid level on indicator every six months (Fig. 1) with engine idling and transaxle in park or neutral position. **Allow the engine to idle for at least one minute with vehicle on level ground. This will assure complete oil level stabilization between differential and transmission.** A properly filled transaxle will read near the "add" mark when fluid temperature is 21 degrees Celsius (70 degrees Fahrenheit) and in the "HOT" region at 82 degrees Celsius (180 degrees Fahrenheit) (average operating temperature).

Fluid and Filter Changes

Fluid and filter changes are not required for average passenger vehicle usage.

Severe usage as defined below, requires that fluid and filter be changed, the magnet (on the inside of the oil pan) should be cleaned with a clean, dry cloth every 24 000 km (15,000 miles).

(a) More than 50% operation in heavy city traffic during hot weather above 32°C (90°F.).

(b) Police, Taxi, Commercial Type Operation, and Trailer Towing.

When the factory fill fluid is changed as recommended above, only fluids of the type labeled MOPAR ATF PLUS (Automatic Transmission fluid) Type 7176, or DEXRON II, should be used. A filter change should be made at the time of the oil change and the magnet (on the inside of the oil pan) should be cleaned with a clean, dry cloth.

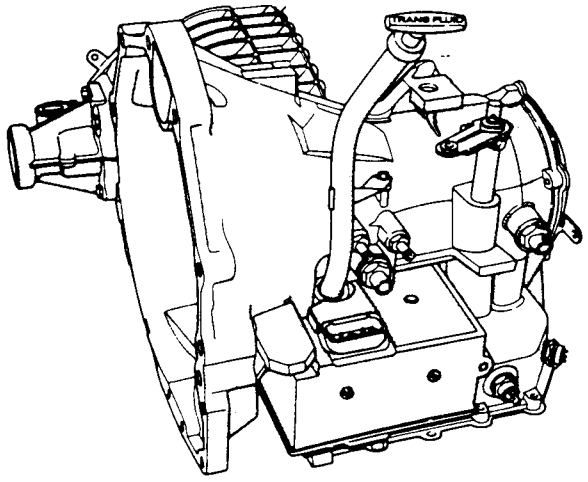

Fig. 1—Oil Level Indicator Location

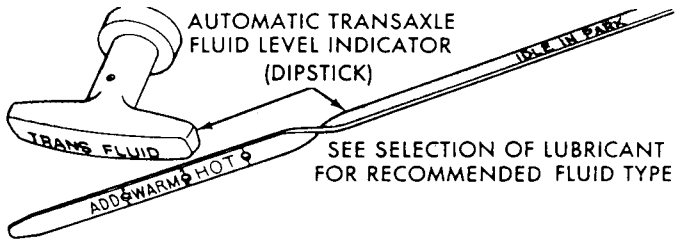

Fig. 2—Oil Level Indicator

If the transaxle is disassembled for any reason, the fluid and filter should be changed.

Drain and Refill

(1) Raise vehicle on a hoist (See Lubrication, "Group 0"). Place a drain container with a large opening, under transaxle oil pan.

(2) Loosen pan bolts and tap the pan at one corner to break it loose allowing fluid to drain, then remove the oil pan.

(3) Install a new filter and O-ring on bottom of the valve body.

(4) Clean the oil pan and magnet. Reinstall pan using new RTV sealant. Tighten oil pan bolts to 19 N·m (165 in. lbs.).

(5) Pour four quarts of MOPAR ATF PLUS (Automatic Transmission Fluid) Type 7176, or DEXRON II, through the fill tube.

(6) Start engine and allow to idle for at least one minute. Then, with parking and service brakes applied, move selector lever momentarily to each position, ending in the park or neutral position.

(7) Add sufficient fluid to bring level to 1/8 inch below the "**ADD**" mark.

Recheck fluid level after transaxle is at normal operating temperature. The level should be in the "HOT" region (Fig. 1).

To prevent dirt from entering transaxle, make certain that dipstick is seated into the dipstick fill tube.

GEARSHIFT LINKAGE ADJUSTMENT

When it is necessary to disassemble linkage cable from levers, which use plastic grommets as retainers, the grommets should be replaced with new grommets. Use a prying tool to force rod from grommet in lever, then cut away old grommet. Use pliers to snap

new grommet into lever and rod into grommet.

CAUTION: Set parking brake.

(1) Place gearshift lever in "P" (PARK) position.

(2) Loosen clamp bolt on gearshift cable bracket.

(3) Column shift: Insure that preload adjustment spring engages fork on transaxle bracket.

(4) Pull the shift lever by hand all the way to the front detent position (PARK) and tighten lock screw to 11 N·m (100 in. lbs.). Gearshift linkage should now be properly adjusted.

(5) Check adjustment as follows:

(a) Detent position for neutral and drive should be within limits of hand lever gate stops.

(b) Key start must occur only when shift lever is in park or neutral positions.

(6) To remove button assembly, completely remove knob attaching fasteners. Pull knob "up" sharply. Proceed as outlined in console removal, "Group 23."

After console is back in place, install knob and button by reversing the above procedure.

SERVICE IN VEHICLE

GENERAL INFORMATION

Various transaxle components can be removed for repairs without removing the transaxle from the vehicle. The removal, reconditioning, and installation procedures for some of these components are covered here.

The valve body (see service out of vehicle) may be serviced in the vehicle, as can the parking sprag, solenoid assembly, PRNDL Switch, Neutral/Safety switch, and extension housing oil seal.

SPEEDOMETER PINION GEAR

When the speedometer pinion adapter is removed for any reason, a NEW O-ring must be installed on the outside diameter of the adapter.

Remove and Install

(1) Remove bolt and washer assembly securing speedometer pinion adapter in the extension housing.

(2) With cable housing connected, carefully work adapter and pinion out of the extension housing.

(3) Remove the retainer and remove the pinion from the adapter.

(4) If transmission fluid is found in cable housing, install a new speedometer pinion and seal assembly.

(5) If transmission fluid is found leaking between the cable and adapter, replace the small O-ring on the cable. Remove the adapter from the cable. Replace the O-ring.

(6) Install the adapter on the cable.

(7) Install the pinion on adapter with a new large O-ring and install retainer on pinion and adapter. Be sure the retainer is properly seated.

Before installing pinion, adapter, and cable assembly make sure adapter flange and its mating areas on extension housing are clean. Dirt or sand will cause misalignment resulting in speedometer pinion gear damage.

(8) Install bolt and washer. Tighten retainer bolt to 7 N·m (60 in. lbs.).

ALUMINUM THREAD REPAIR

Damaged or worn threads in the aluminum transaxle case and valve body can be repaired by the use of Heli-Coils, or equivalent. Essentially, this repair consists of drilling out the worn-out damaged threads, tapping the hole with a special Heli-Coil tap, or equivalent, and installing a Heli-Coil insert, or equivalent, into the tapped hole. This brings the hole back to its original thread size.

Heli-Coil, or equivalent, tools and inserts are readily available from most automotive parts suppliers.

Teardown and Assembly

OIL COOLERS AND TUBES REVERSE FLUSHING

When a transaxle failure has contaminated the fluid, the oil cooler(s) should be flushed and the torque converter replaced with an exchange unit to insure that metal particles or sludged oil are not later transferred back into the reconditioned (or replaced) transaxle.

(1) Place a 'length of flush hose' over the end of the lower (to cooler) oil cooler hose. Insert flush hose securely into a waste oil container.

(2) Apply compressed air to the upper oil cooler hose in very short, sharp blasts.

(3) Pump approximately one pint of MOPAR ATF PLUS (automatic transmission fluid) type 7176 into the upper (from cooler) oil cooler hose.

(4) Repeat step (2). Remove 'length of flush hose.'

TRANSAXLE REMOVAL AND INSTALLATION

Removal (See A-413 Automatic Transaxle)
Installation (See A-413 Automatic Transaxle)

A-604 TRANSAXLE IDENTIFICATION

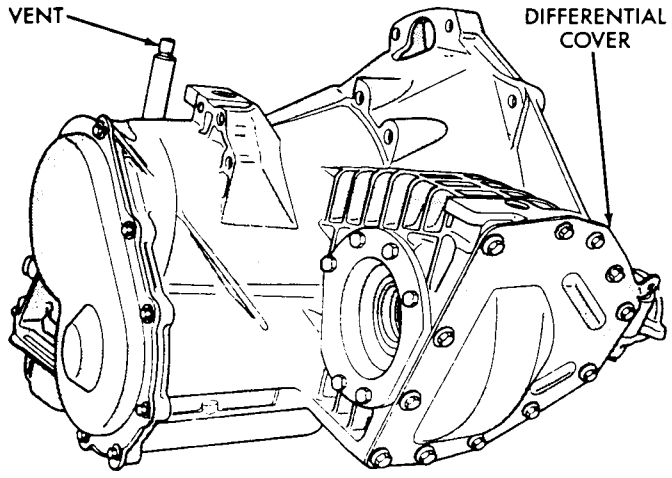

Fig. 1—Transaxle Right Side

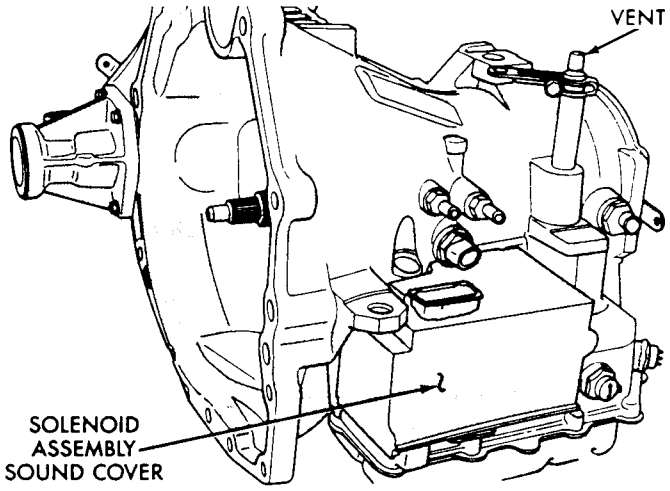

Fig. 2—Transaxle Left Side

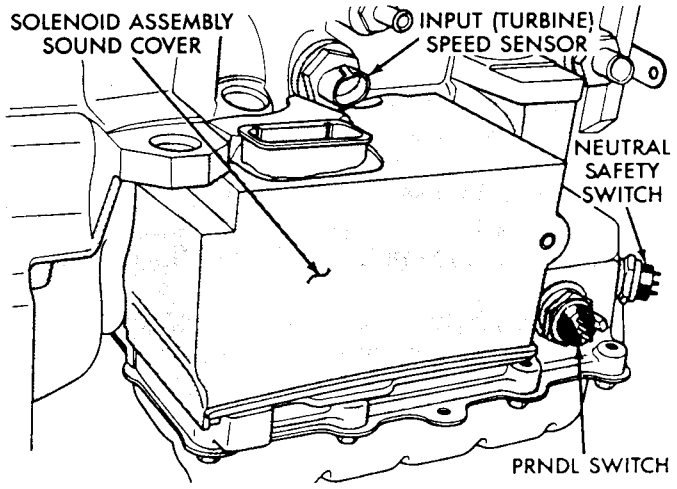

Fig. 3—Sound Cover Installed

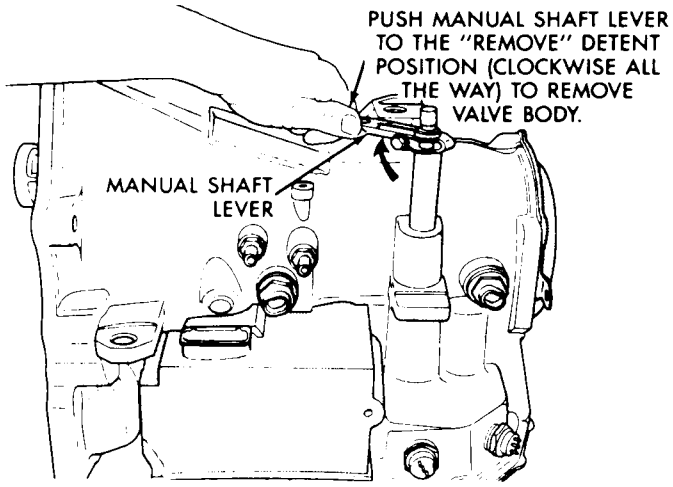

Fig. 4—Position Manual Valve

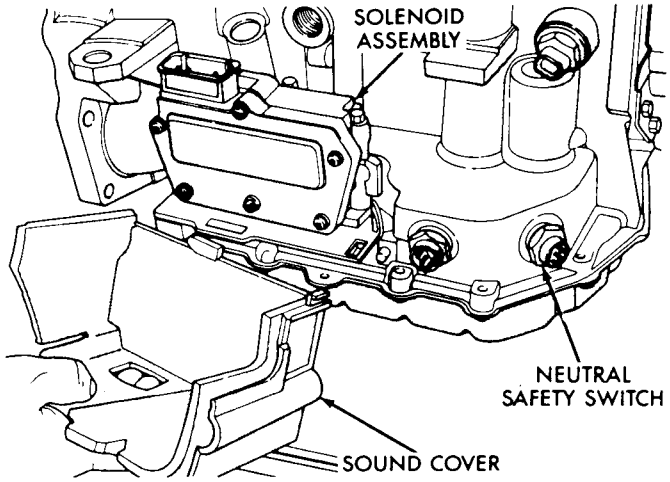

Fig. 3—Sound Cover

SOLENOID ASSEMBLY-REPLACE

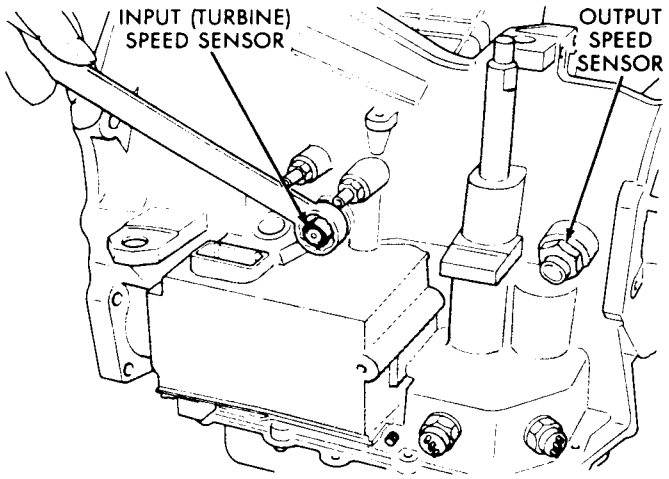

Fig. 1—Input Speed Sensor

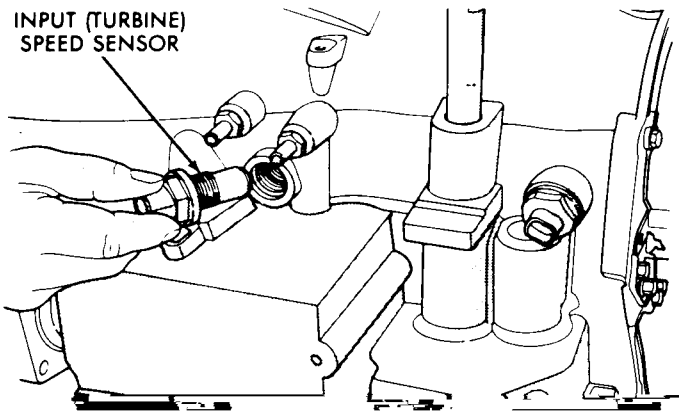

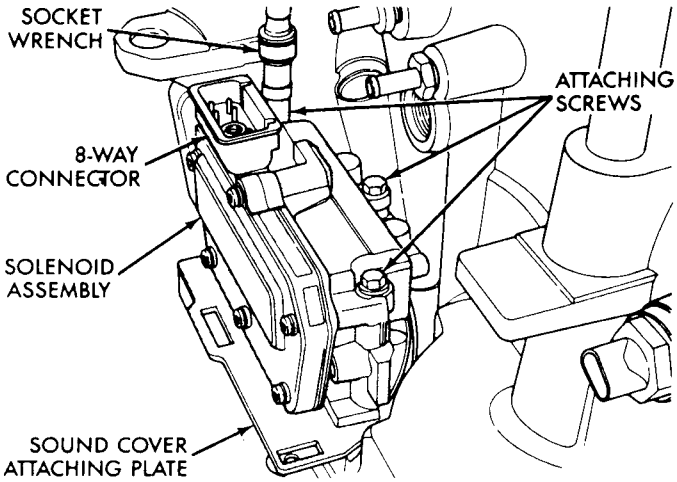

Fig. 4—Attaching Screws

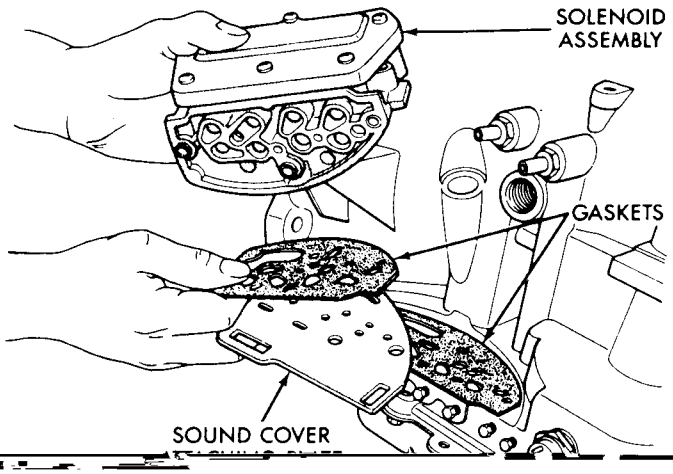

PRNDL SWITCH

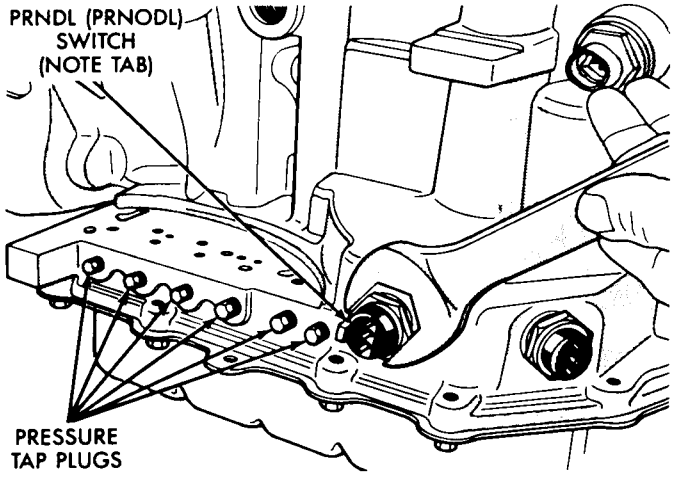

Fig. 1—PRNDL Switch

OUTPUT SPEED SENSOR

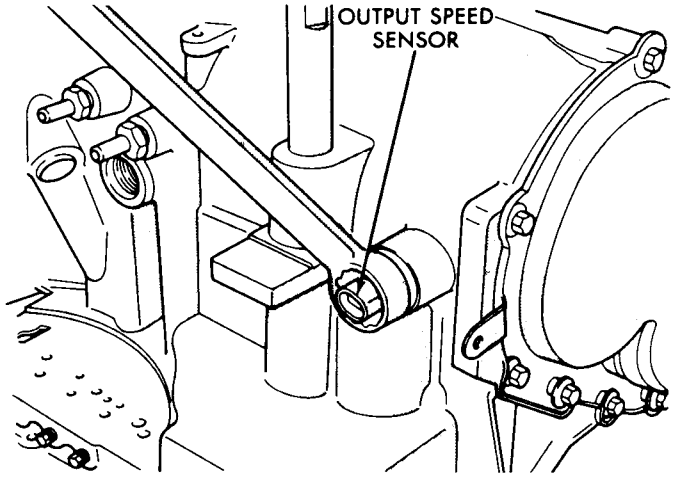

Fig. 1—Output Speed Sensor

NEUTRAL SAFETY SWITCH

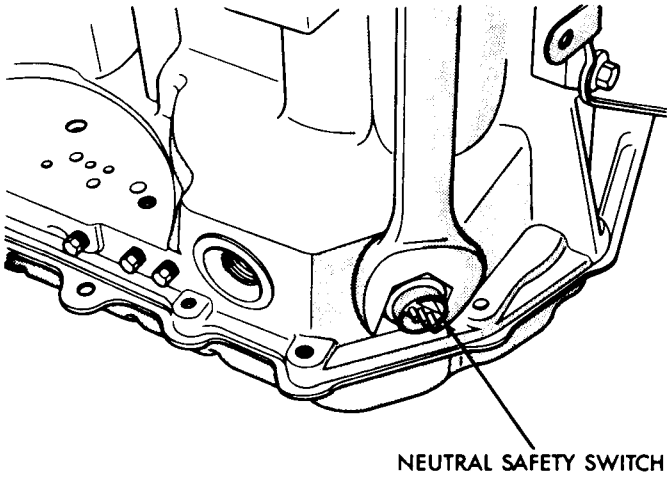

Fig. 1—Neutral Safety Switch

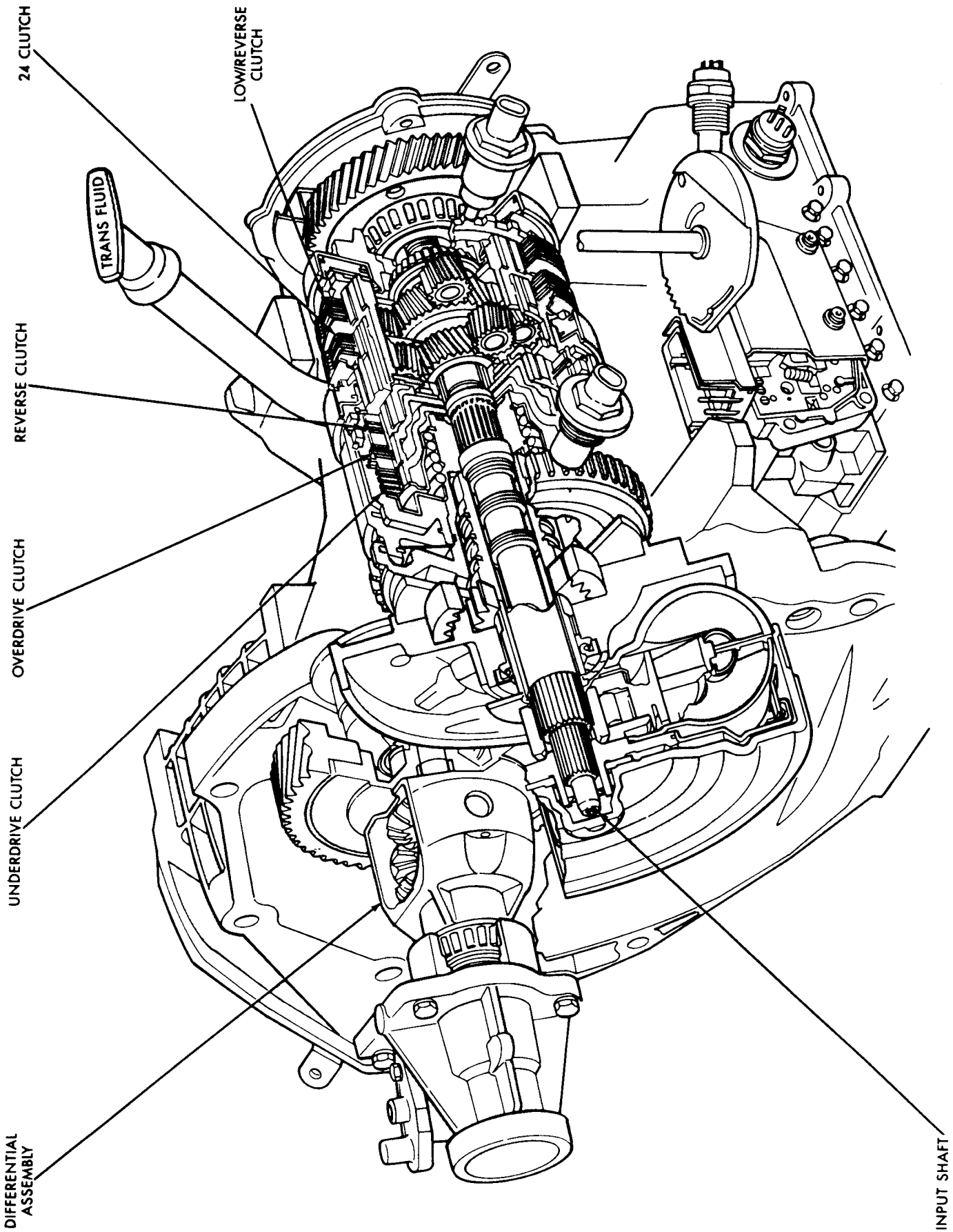
24 CLUTCH
LOW/REVERSE CLUTCH
TRANS FLUID
REVERSE CLUTCH
OVERDRIVE CLUTCH
UNDERDRIVE CLUTCH
DIFFERENTIAL ASSEMBLY
INPUT SHAFT

VALVE BODY

Prior to removing any transaxle subassemblies, plug all openings and thoroughly clean exterior of the unit, preferably by steam. Cleanliness through entire disassembly and assembly cannot be overemphasized. When disassembling, each part should be washed in a suitable solvent, then dried by compressed air. **Do not wipe parts with shop towels.** All mating surfaces in the transaxles are accurately machined; therefore, careful handling of all parts must be exercised to avoid nicks or burrs.

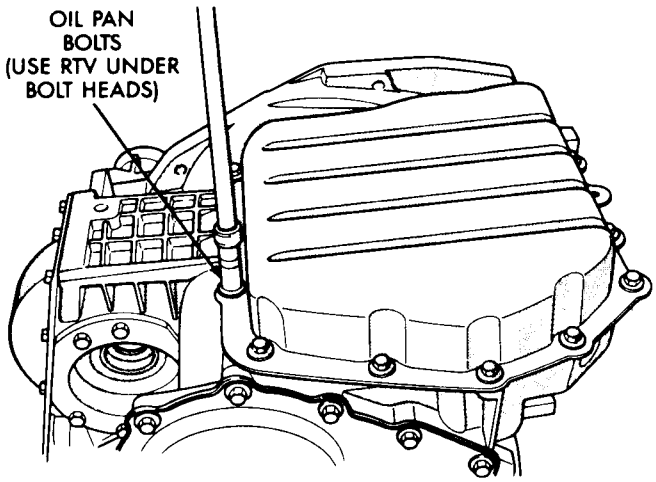

Fig. 1—Oil Pan Bolts

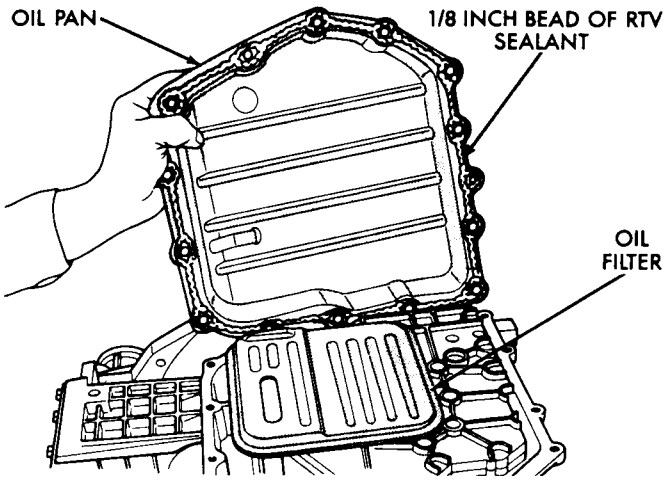

Fig. 2—Oil Pan

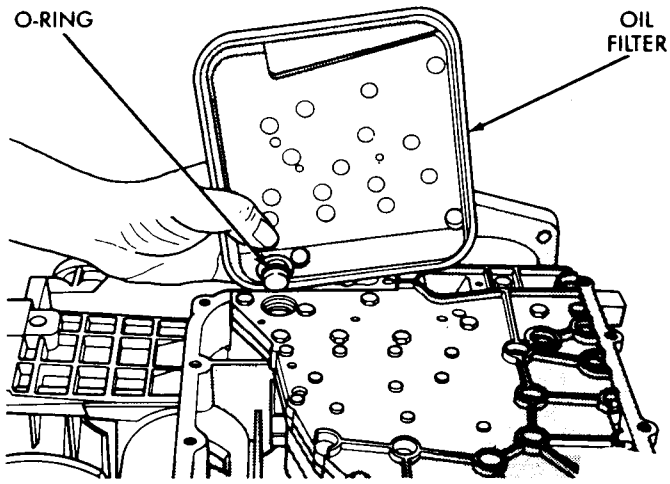

Fig. 3—Oil Filter

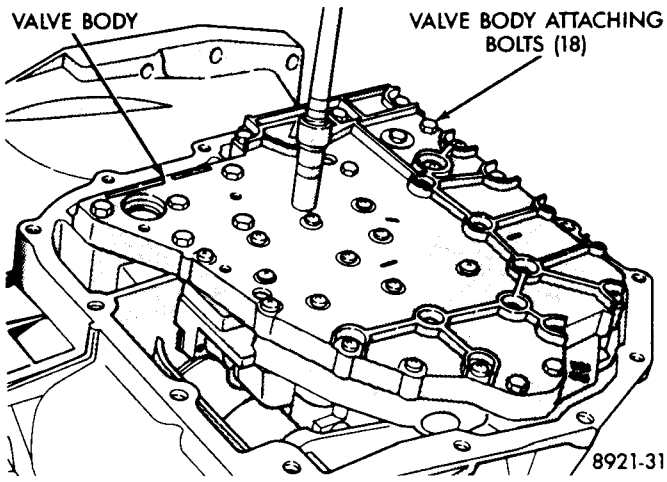

Fig. 4—Valve Body Attaching Bolts

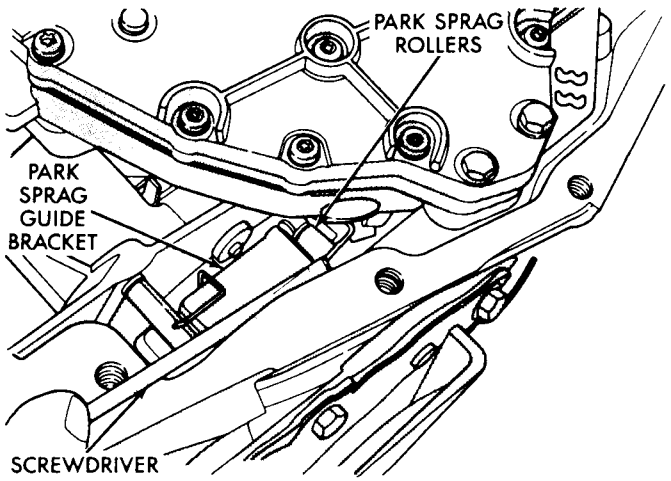

Fig. 5—Push Park Rod Rollers from Guide Bracket

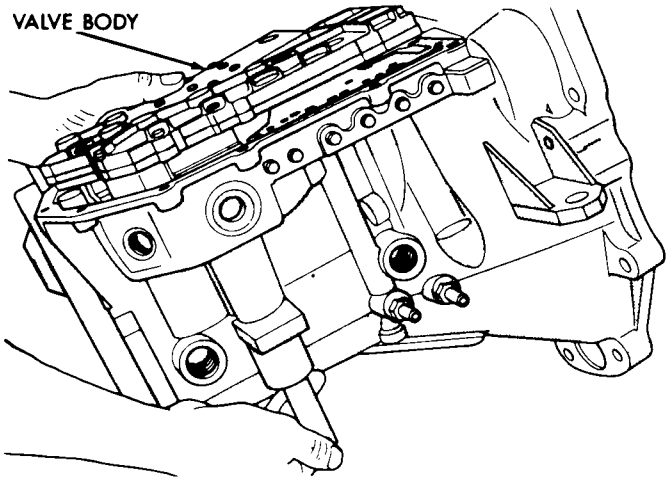

Fig. 6—Remove or Install Valve Body

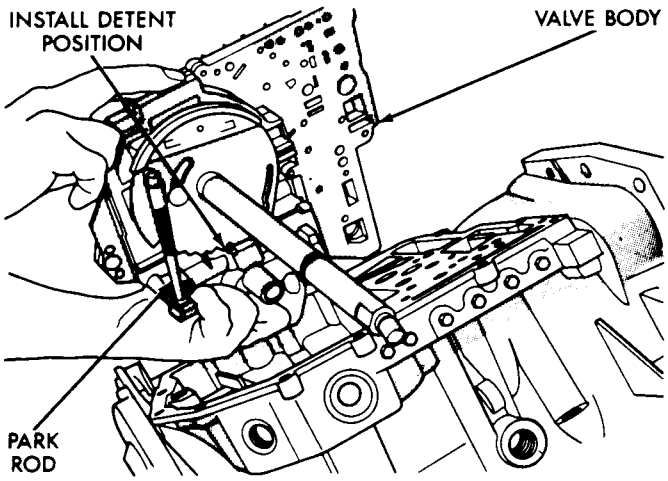

Fig. 7—Valve Body Removed

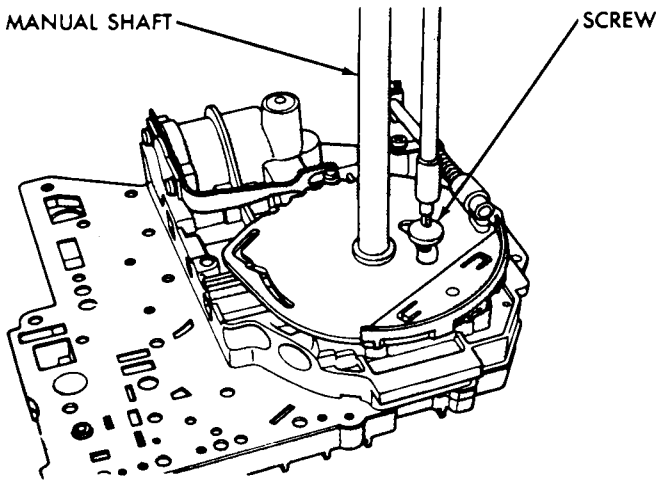

Fig. 8—Manual Shaft Screw

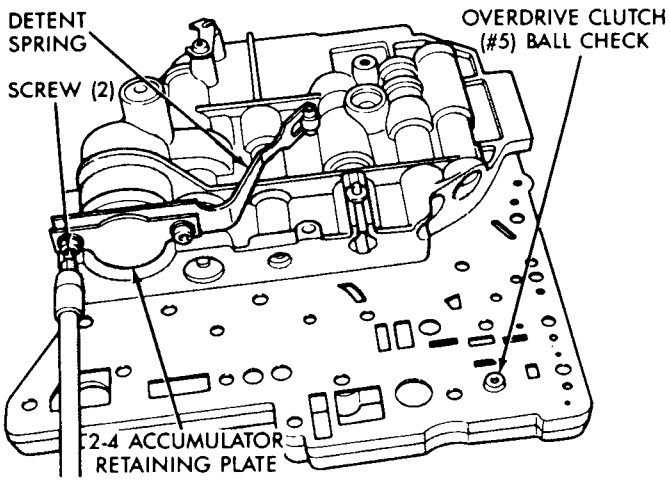

Fig. 9—Retaining Plate Screw

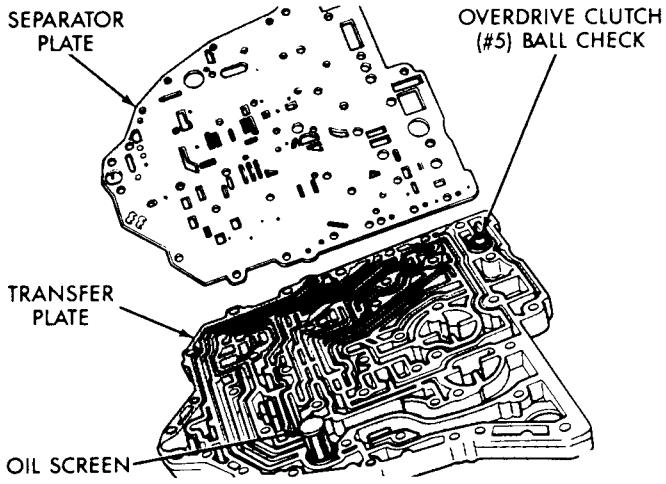

Fig. 10—Transfer Plate and Separator Plate

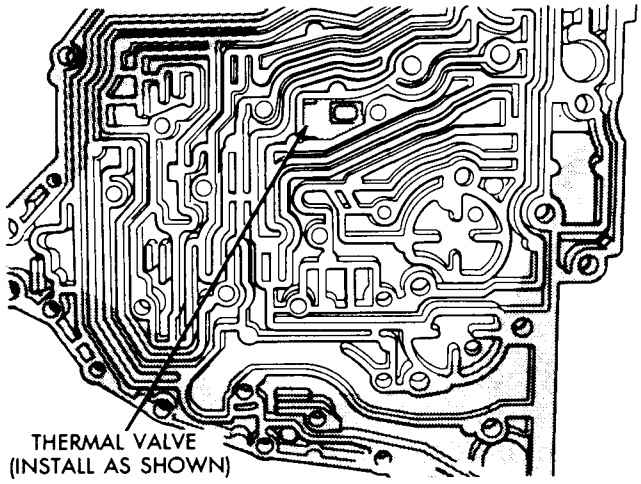

Fig. 11—Transfer Plate

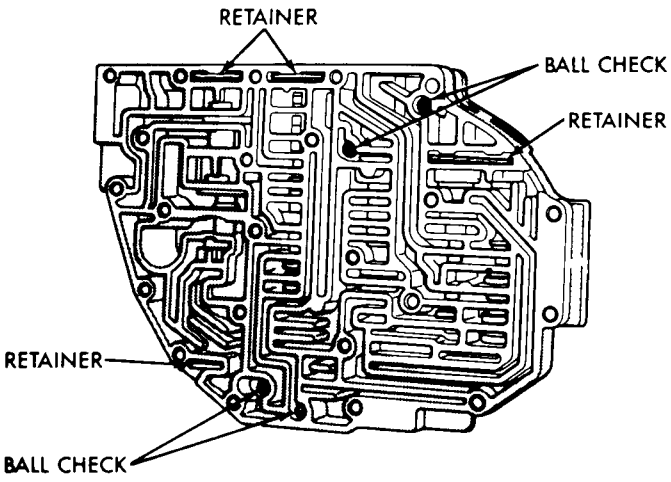

Fig. 12—Ball Check and Retainer Locations

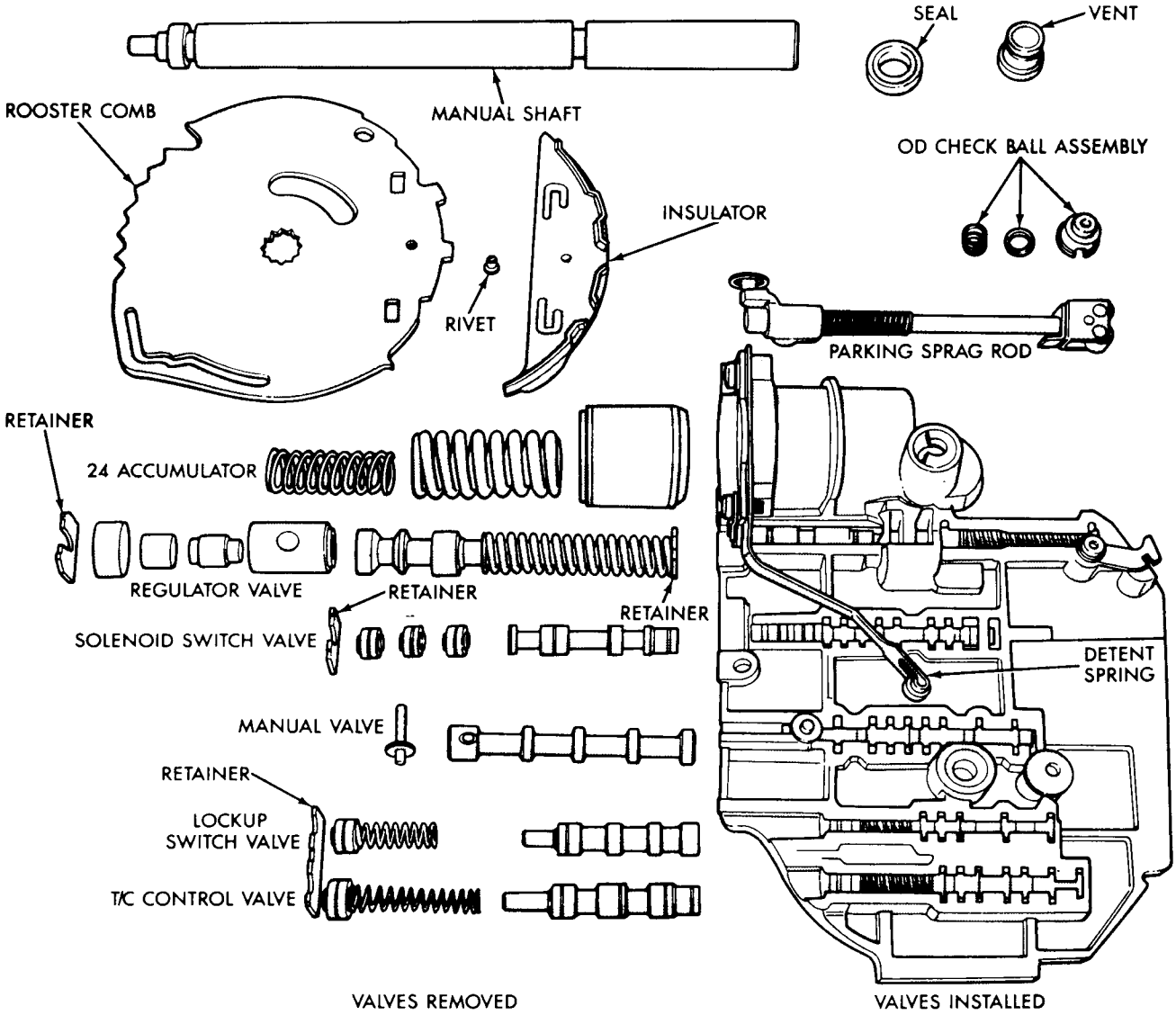

Fig. 13—Springs and Valves Identification

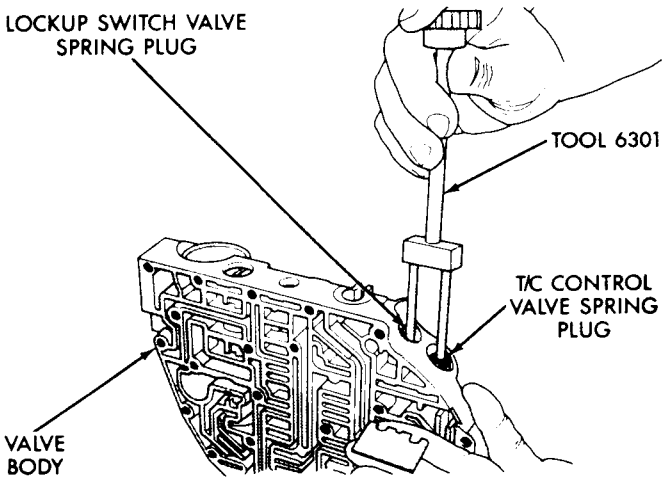

Fig. 14—Remove or Install Dual Retainer Plate

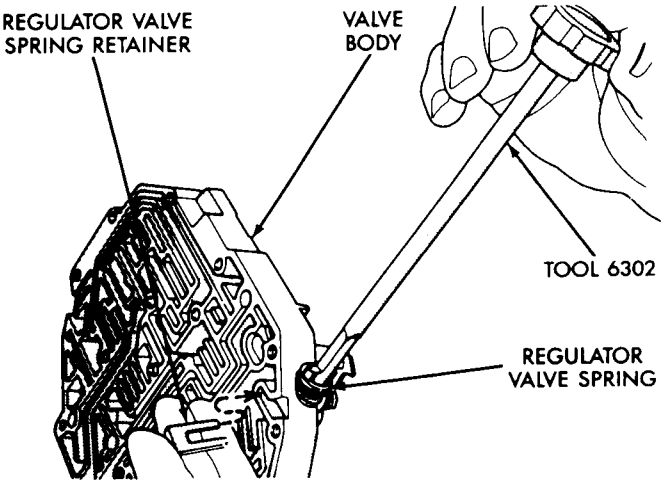

Fig. 15—Remove or Install Retainer Plate

When installing valve body assembly onto transaxle, observe Figure 5 and guide park rod rollers into guide bracket, while shifting manual lever assembly out of the installation position.

ACCUMULATORS

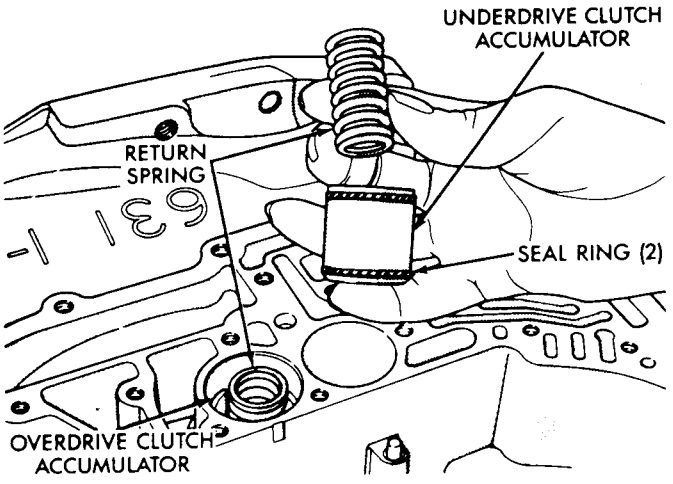

Fig. 1—Accumulators

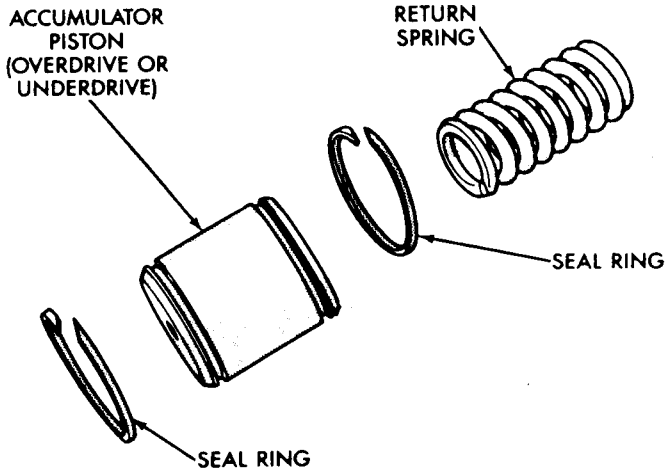

Fig. 2—Accumulator

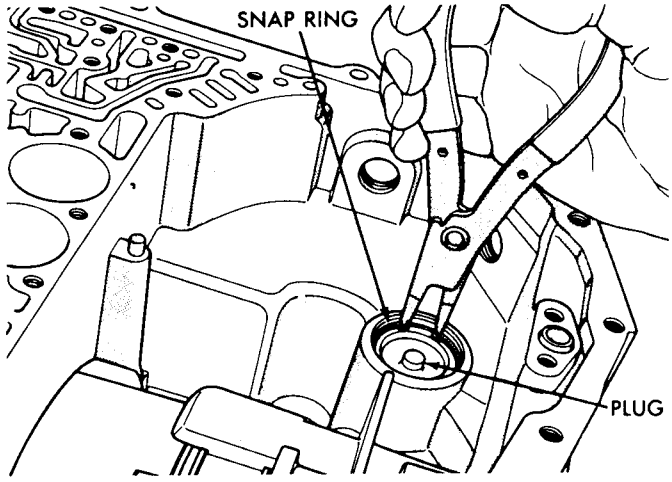

Fig. 3—Low/Reverse Accumulator Snap Ring

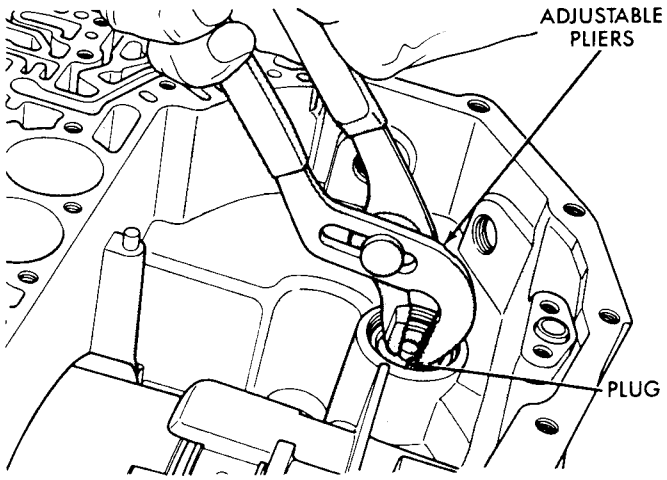

Fig. 4—Low/Reverse Accumulator Plug

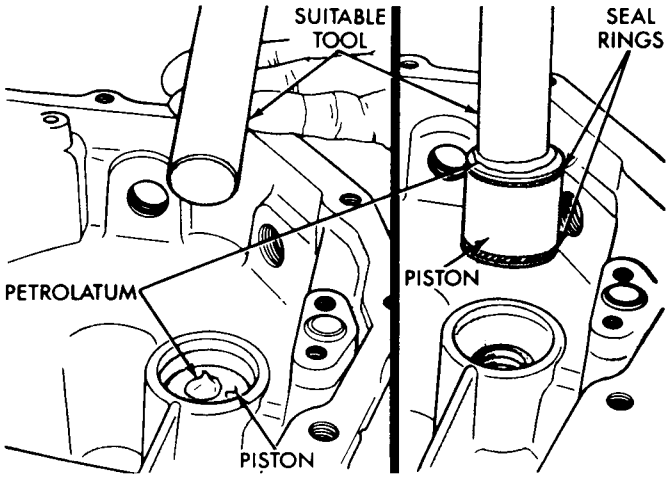

Fig. 5—Low/Reverse Accumulator Piston

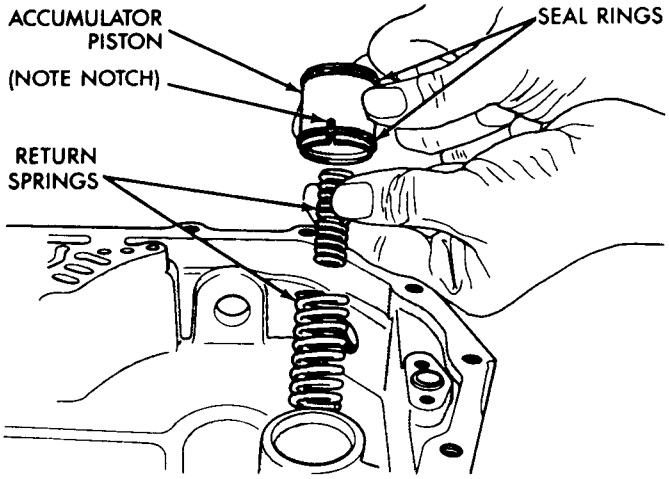

Fig. 6—Low/Reverse Accumulator

OIL PUMP SEAL REPLACE

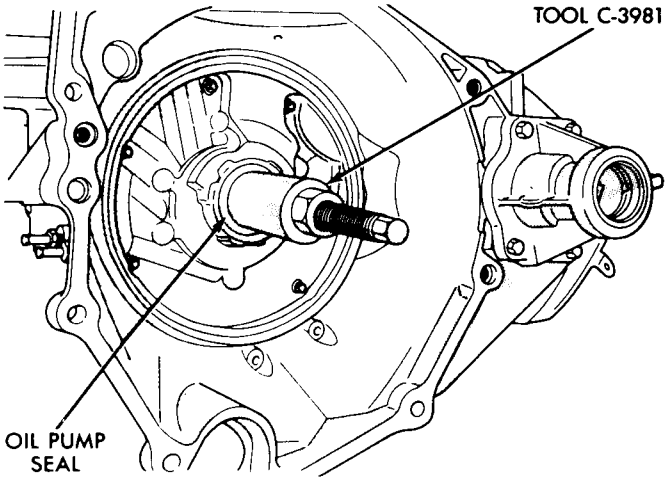

Fig. 1—Remove Oil Pump Seal

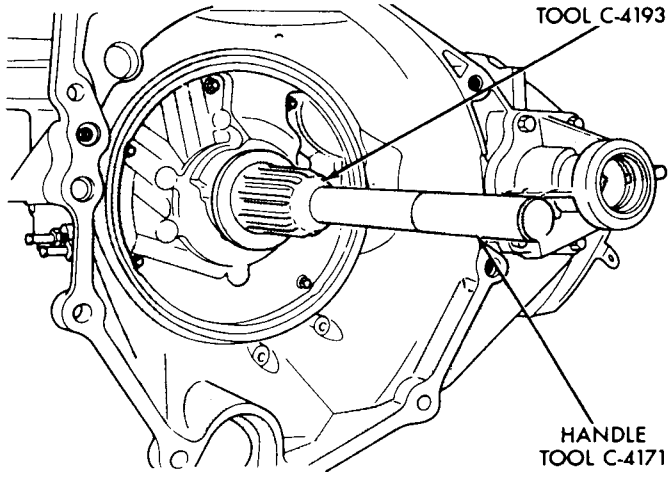

Fig. 2—Install Oil Pump Seal

TRANSAXLE RECONDITION

Input Shaft End Play

Measuring input shaft end play before disassembly will usually indicate when a #4 thrust plate change is required, (except when major parts are replaced). The thrust washer is located behind the input shaft.

(1) Attach a dial indicator to transaxle bell housing with its plunger seated against end of input shaft (Fig. 1).

Move input shaft in and out to obtain end play reading. End play specifications are .31 to .76 mm (.012 to .030 inch).

(2) Record indicator reading for reference when reassembling the transaxle.

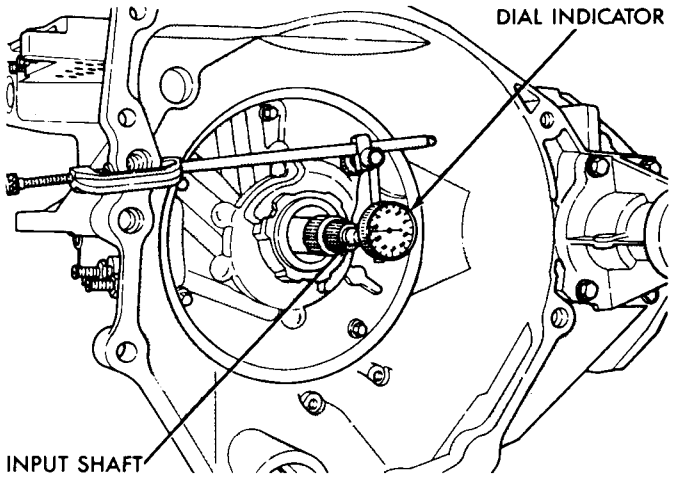

Fig. 1—Measure Input Shaft End Play

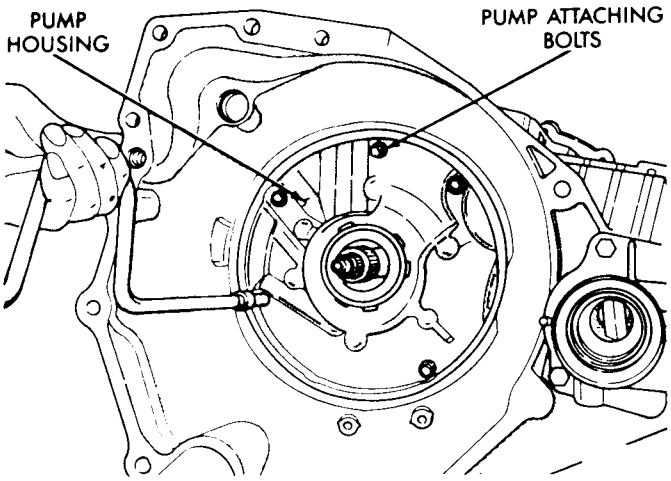

Fig. 2—Pump Attaching Bolts

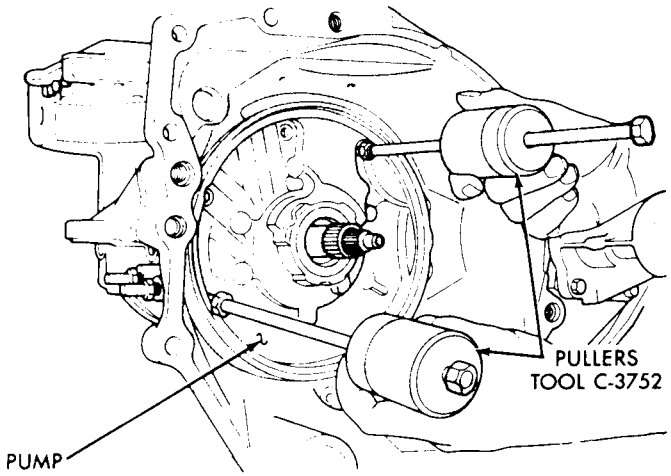

Fig. 3—Install Tool C-3752

CAUTION: Be sure input speed sensor is removed before removing oil pump.

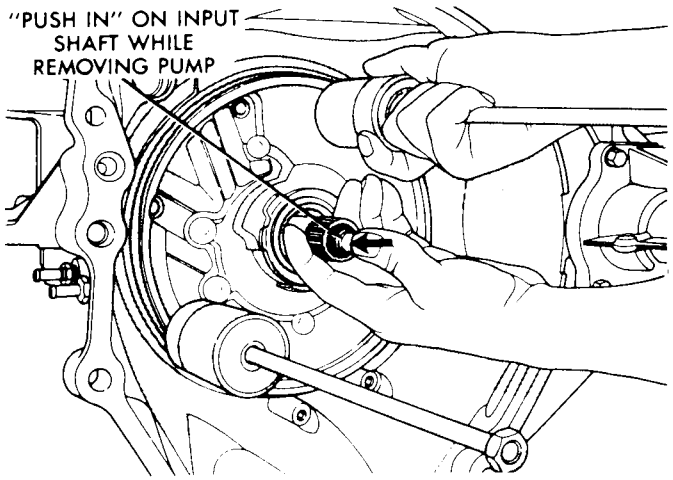

Fig. 4—Remove Oil Pump

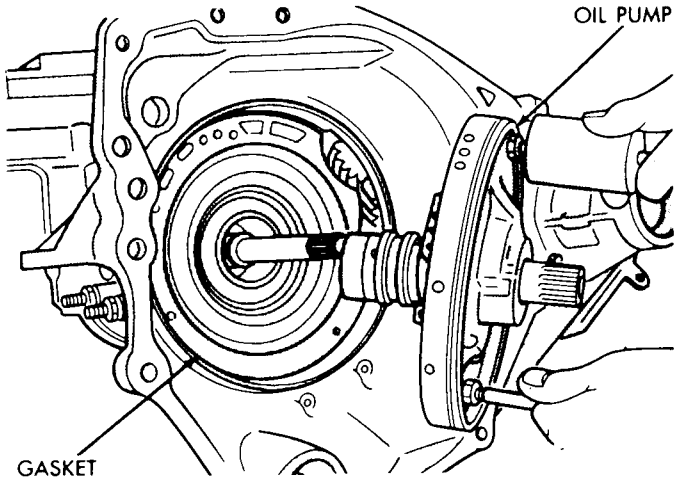

Fig. 5—Oil Pump Removed

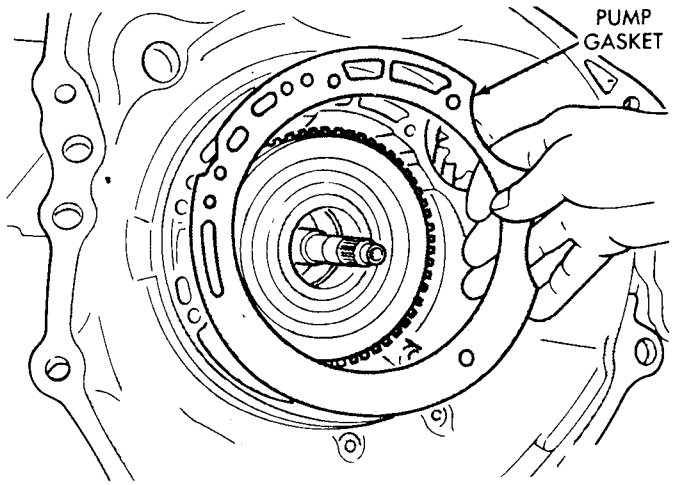

Fig. 6—Oil Pump Gasket

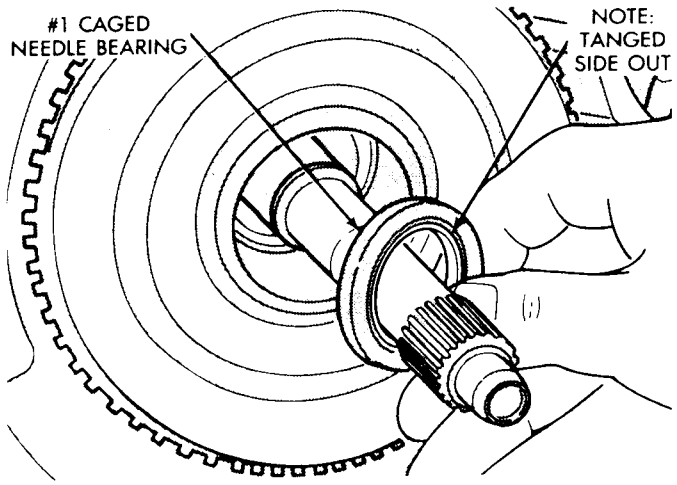

Fig. 7—#1 Caged Needle Bearing

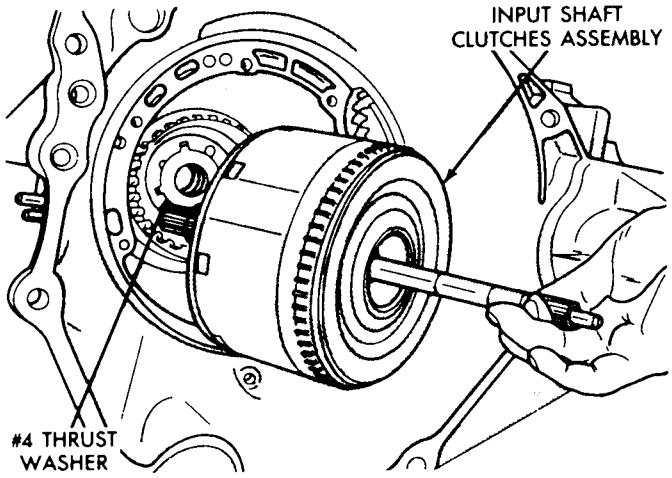

Fig. 8—Input Shaft Clutches Assembly

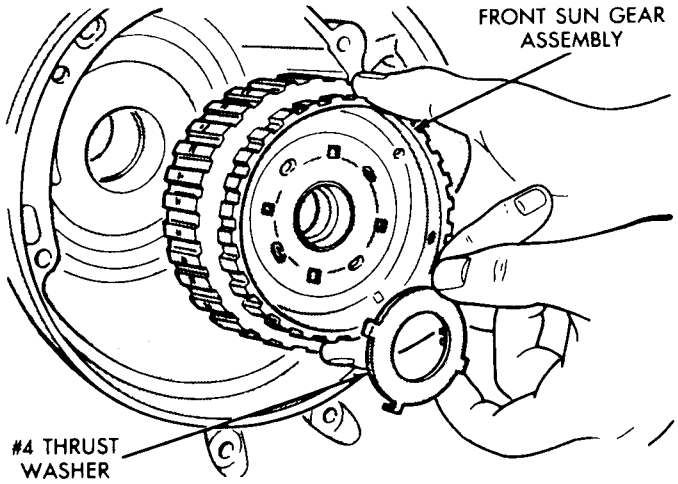

Fig. 9—Front Sun Gear Assembly

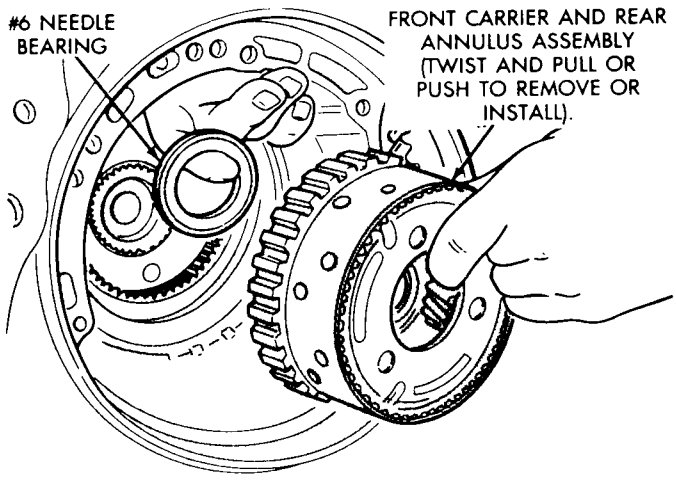

Fig. 10—Front Carrier and Rear Annulus Assembly

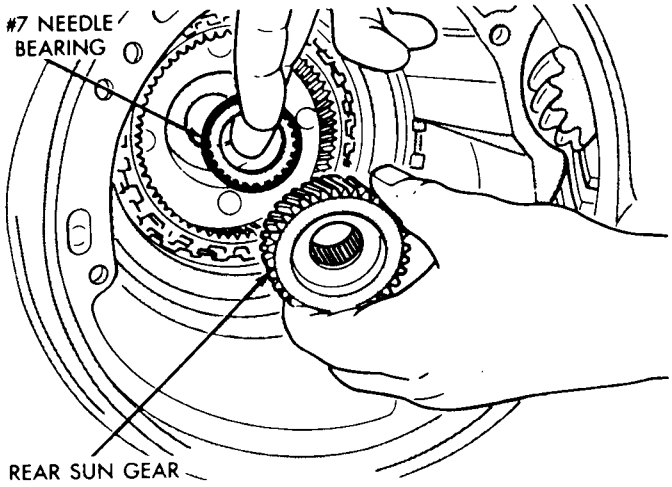

Fig. 11—Rear Sun Gear

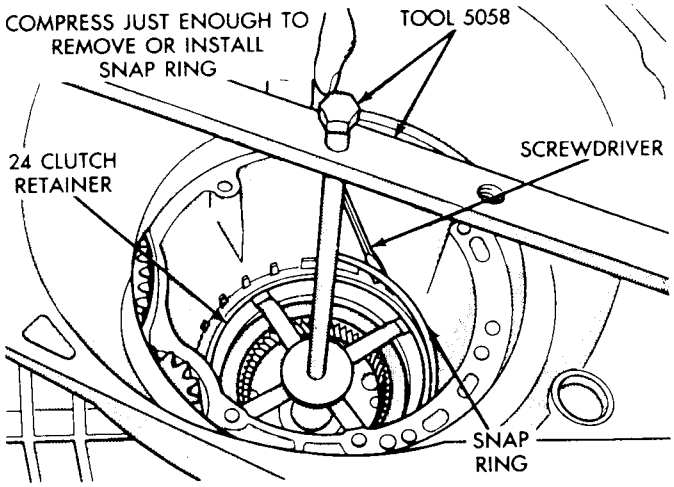

Fig. 12—2/4 Clutch Retainer Snap Ring

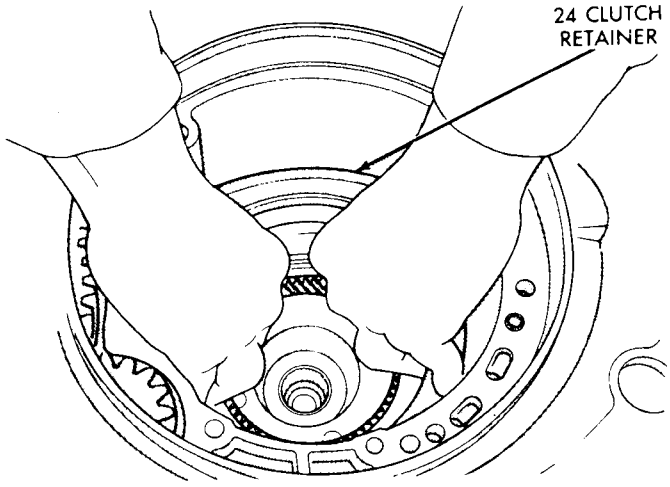

Fig. 13—Remove 2/4 Clutch Retainer

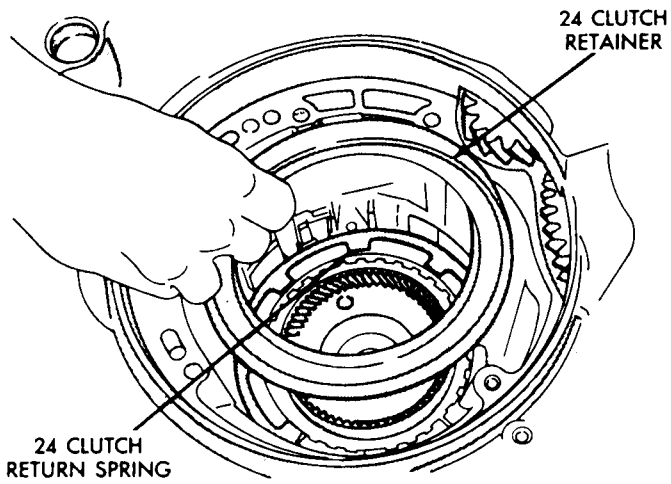

Fig. 14—2/4 Clutch Retainer

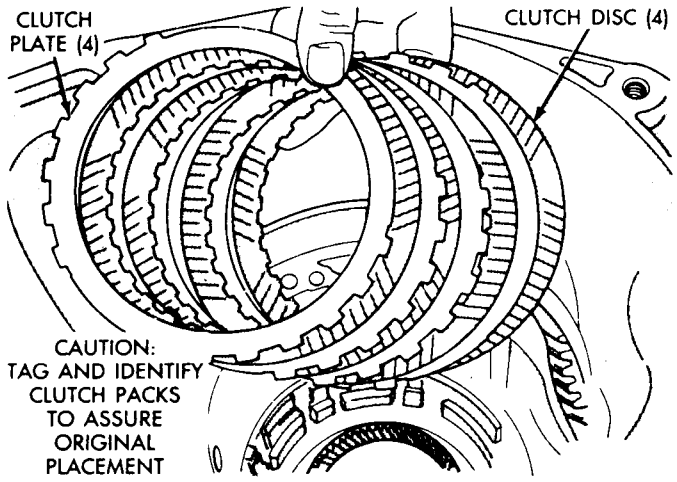

Fig. 17—2/4 Clutch Pack

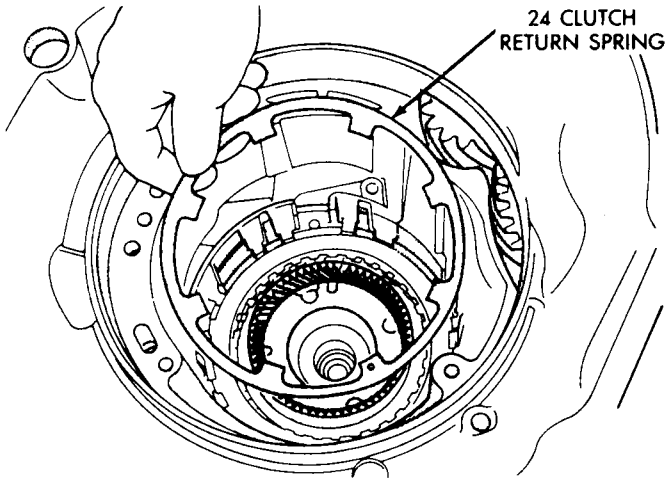

Fig. 15—2/4 Clutch Return Spring

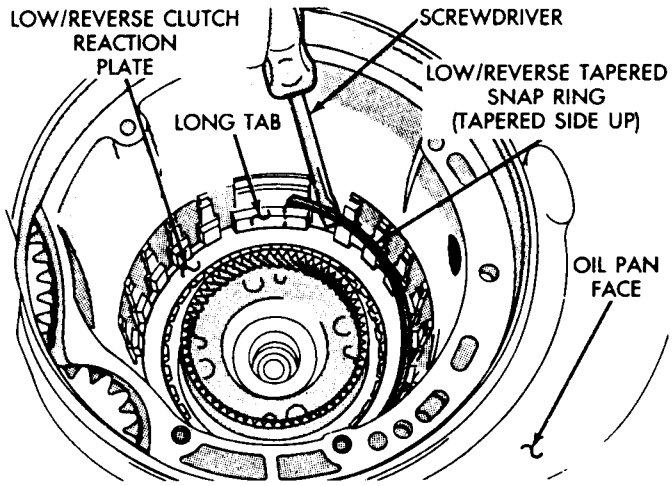

Fig. 18—Tapered Snap Ring

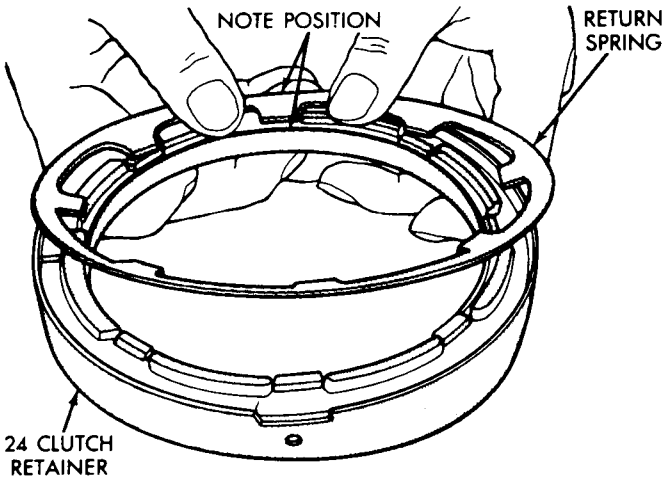

Fig. 16—2/4 Retainer and Spring Indexed

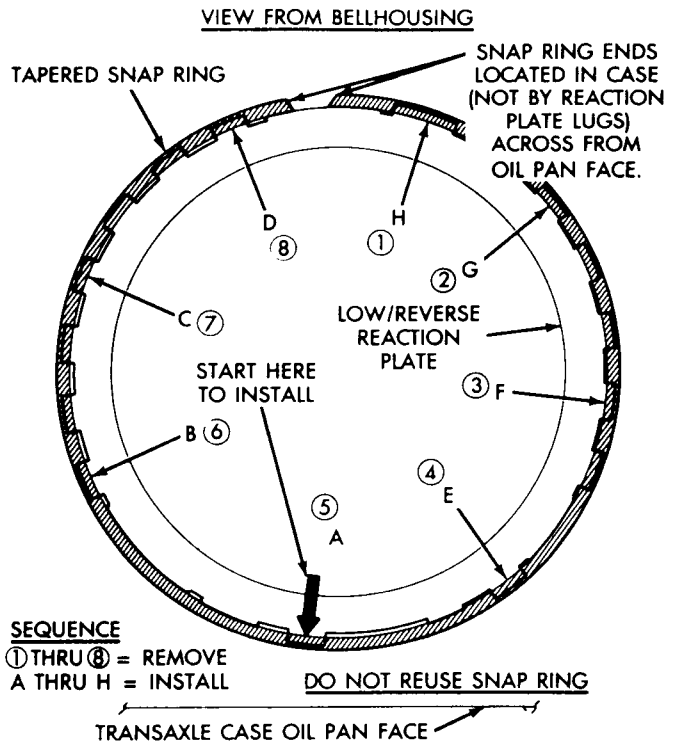

Fig. 19—Tapered Snap Ring Instructions

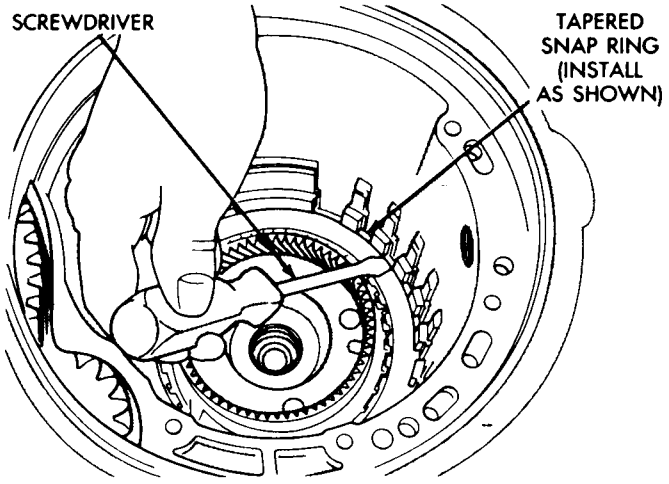

Fig. 20—Snap Ring Installed

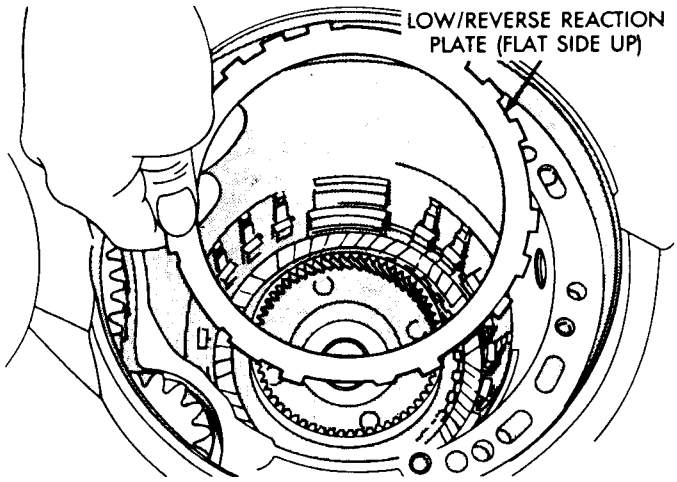

Fig. 21—Low/Reverse Reaction Plate

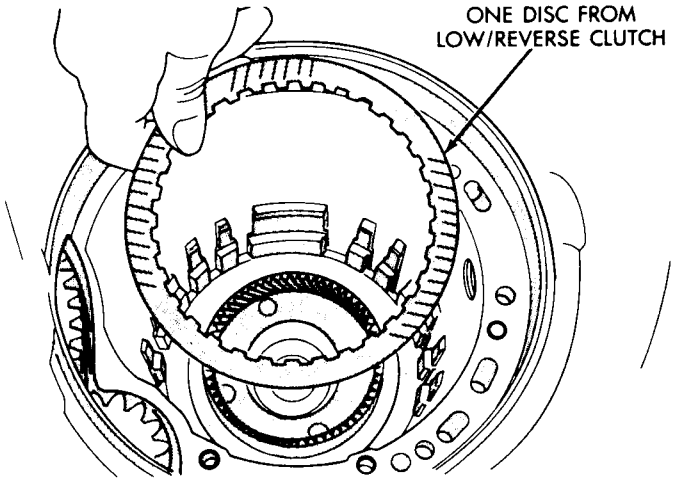

Fig. 22—Remove One Disc

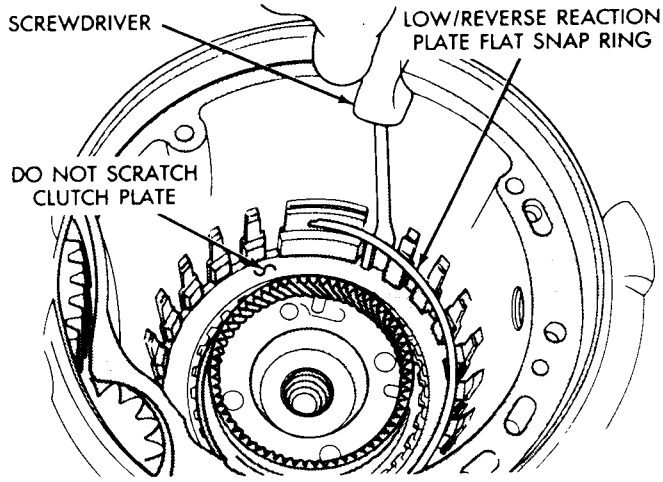

Fig. 23—Low/Reverse Reaction Plate Snap Ring

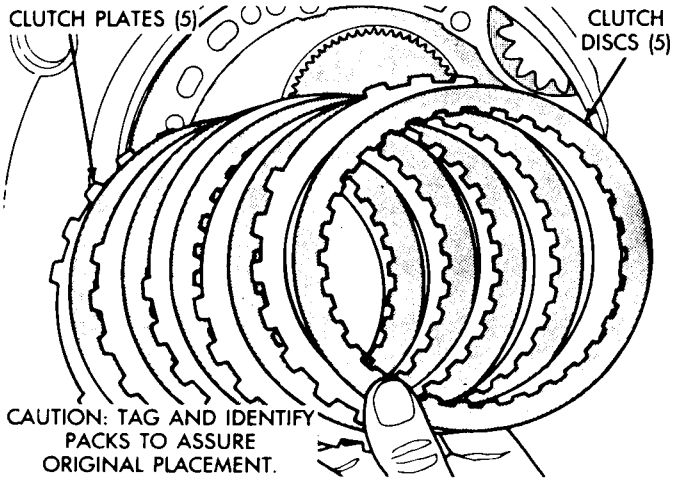

Fig. 24—Low/Reverse Clutch Pack

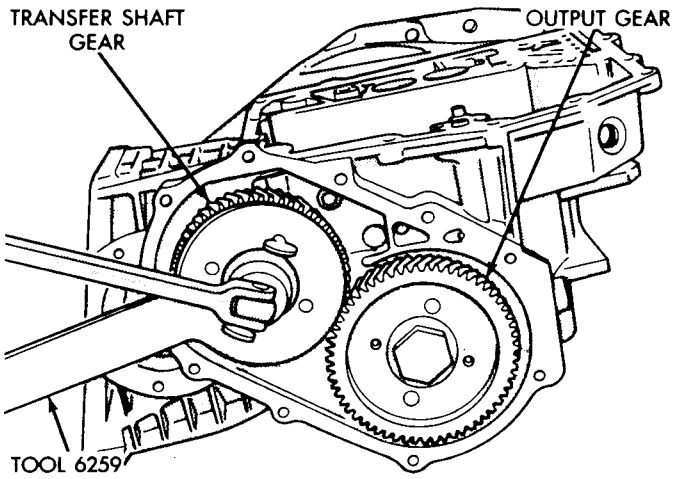

Fig. 27—Remove Transfer Shaft Gear Nut

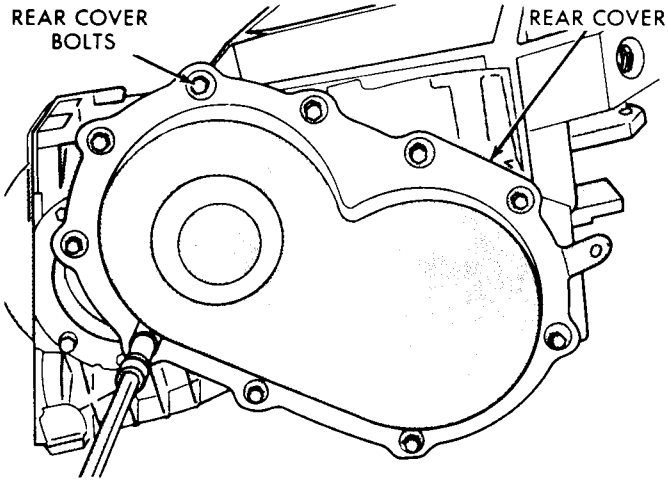

Fig. 25—Rear Cover Bolts

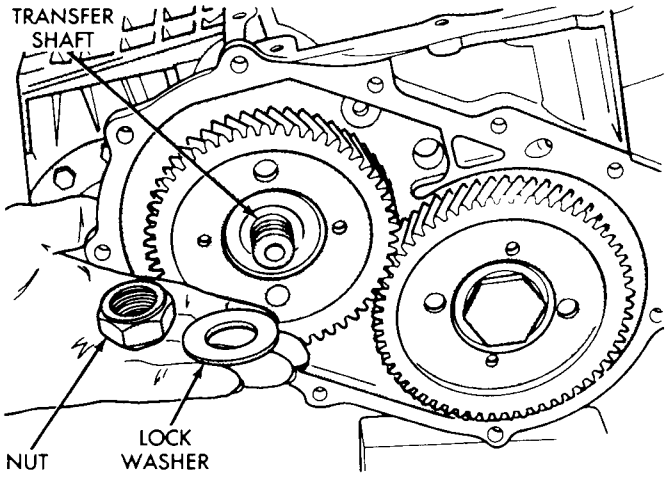

Fig. 28—Transfer Shaft Gear Nut and Washer

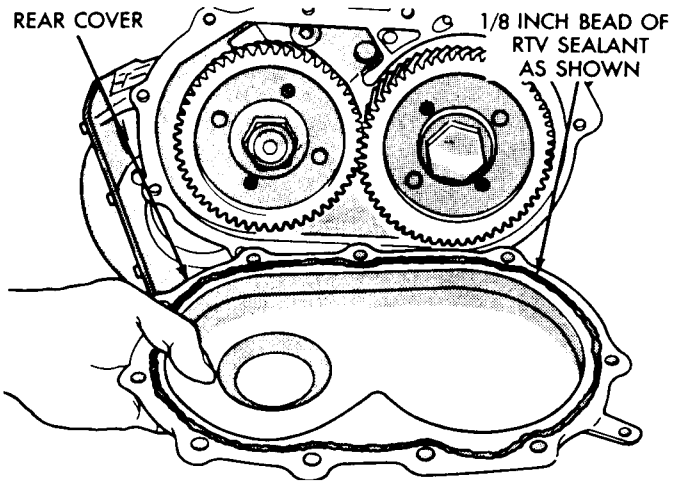

Fig. 26—Rear Cover

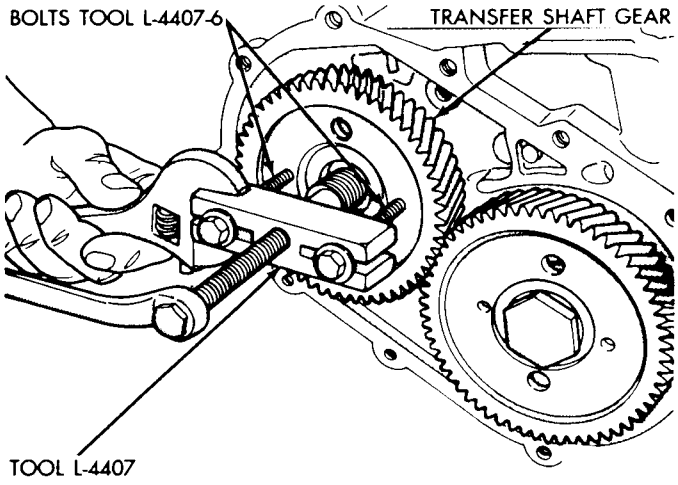

Fig. 29—Remove Transfer Shaft Gear

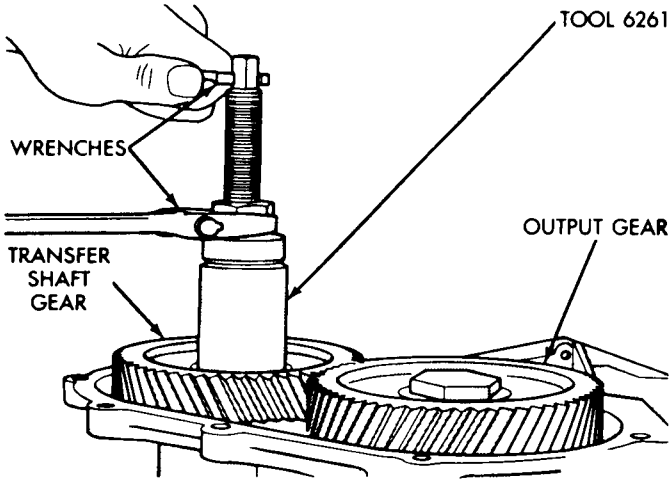

Fig. 30—Install Transfer Shaft Gear

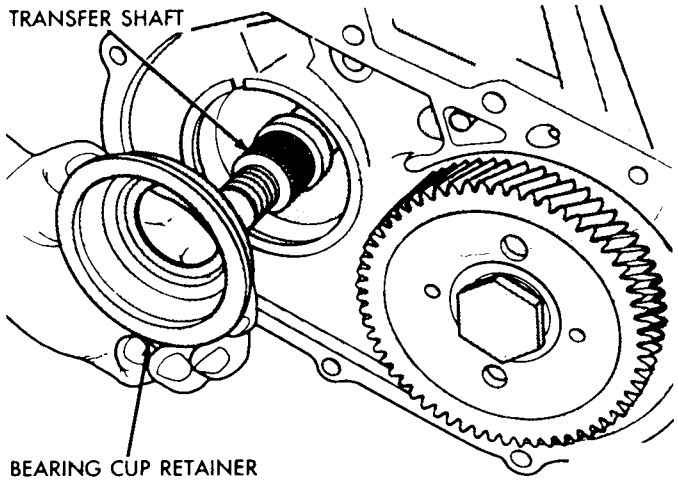

Fig. 33—Bearing Cup Retainer

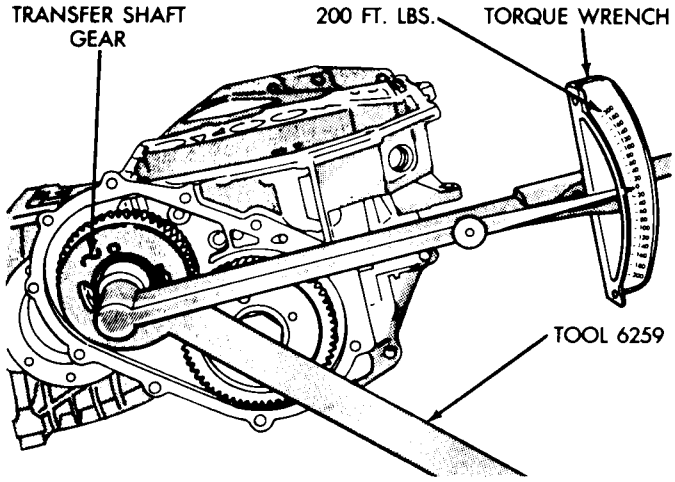

Fig. 31—Tighten Nut to 271 N·m (200 Ft. Lbs.)

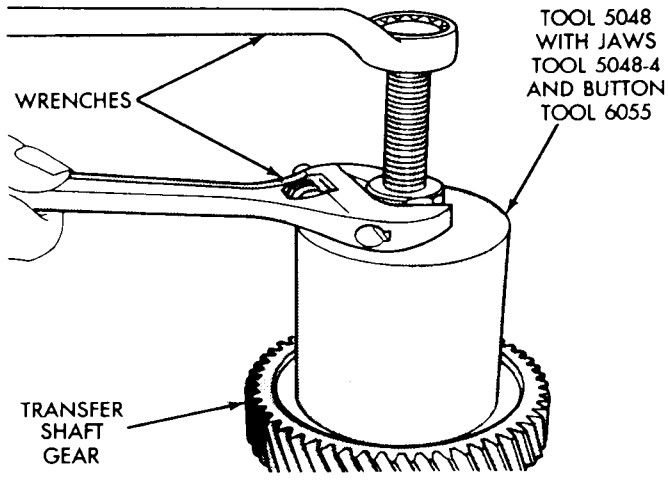

Fig. 34—Remove Transfer Shaft Bearing Cone

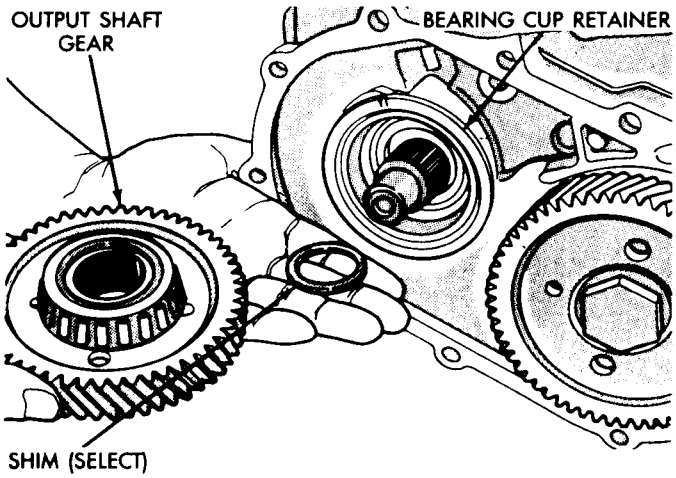

Fig. 32—Transfer Shaft Gear and (Select) Shim

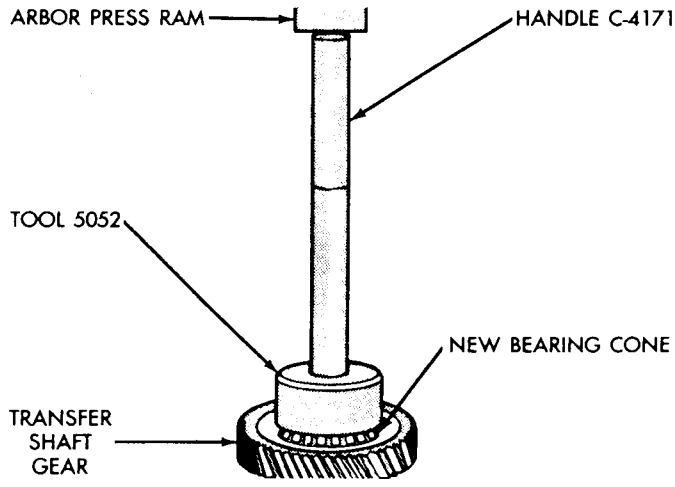

Fig. 35—Install Transfer Shaft Bearing Cone

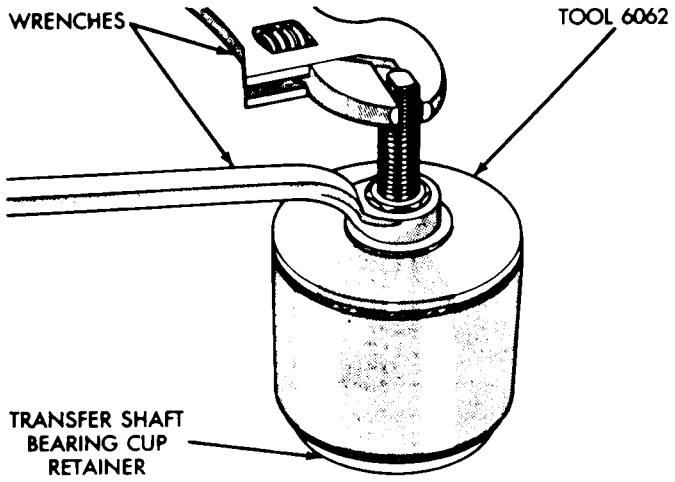

Fig. 36—Remove Transfer Shaft Bearing Cup

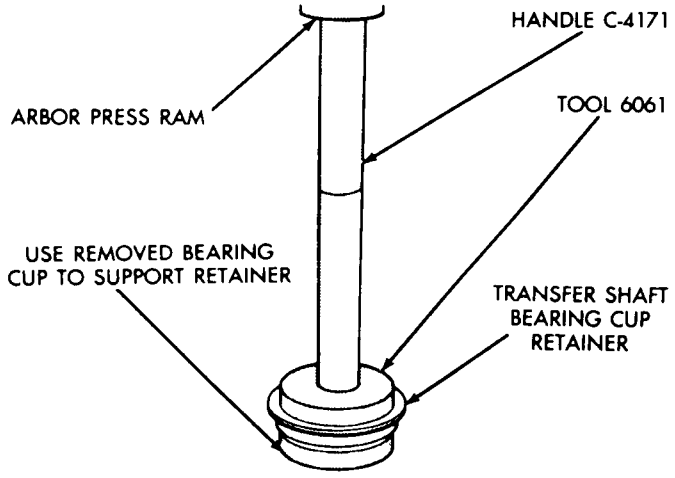

Fig. 37—Install New Bearing Cup

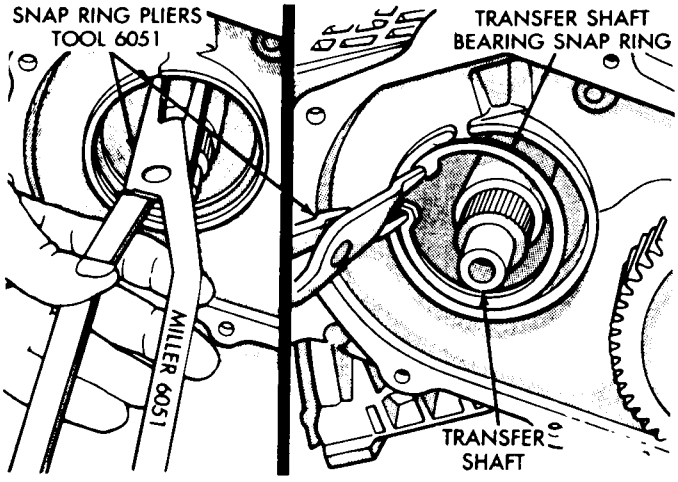

Fig. 38—Transfer Shaft Bearing Snap Ring

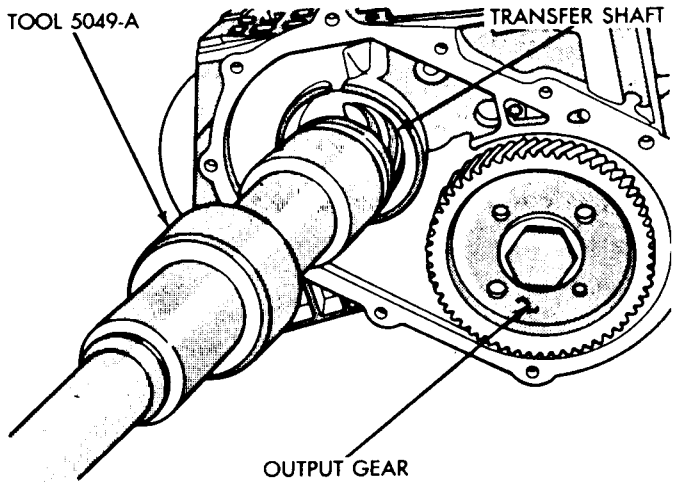

Fig. 39—Transfer Shaft

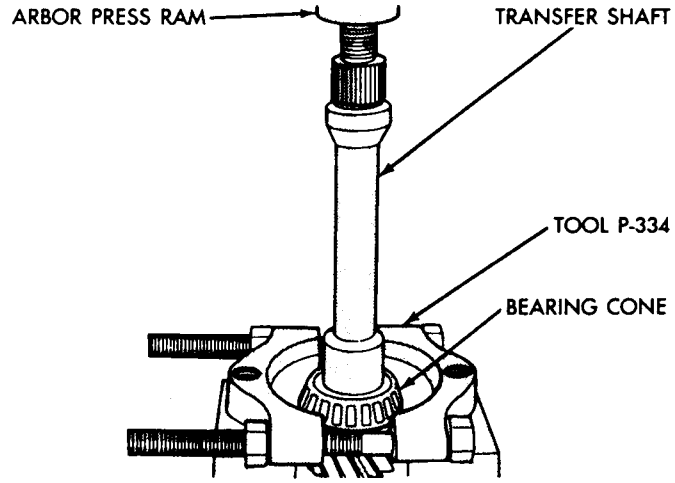

Fig. 40—Remove Transfer Shaft Bearing Cone

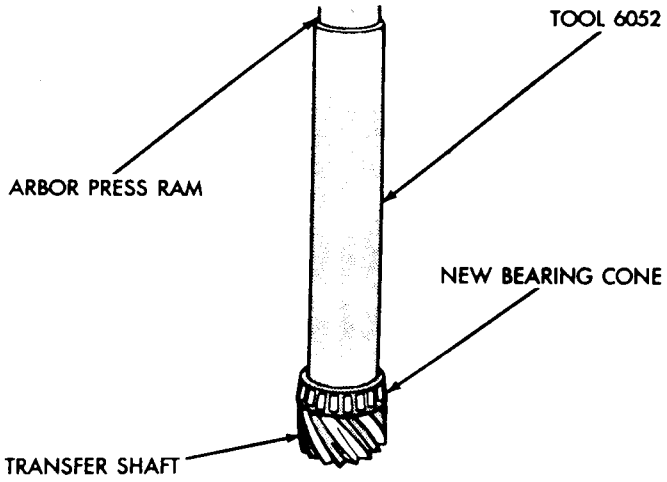

Fig. 41—Install Bearing Cone

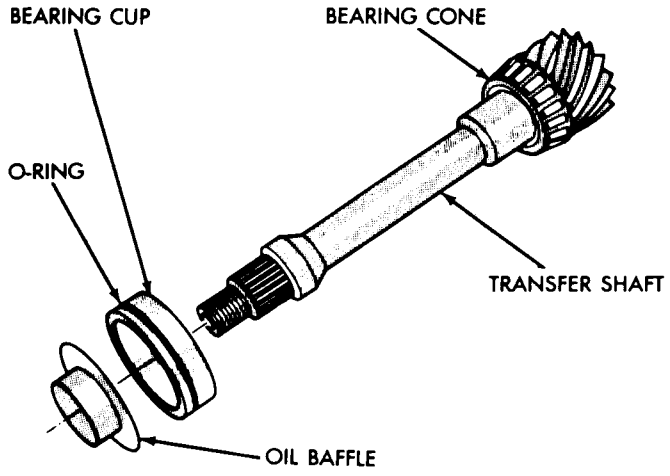

Fig. 42—Bearing Cup Removed

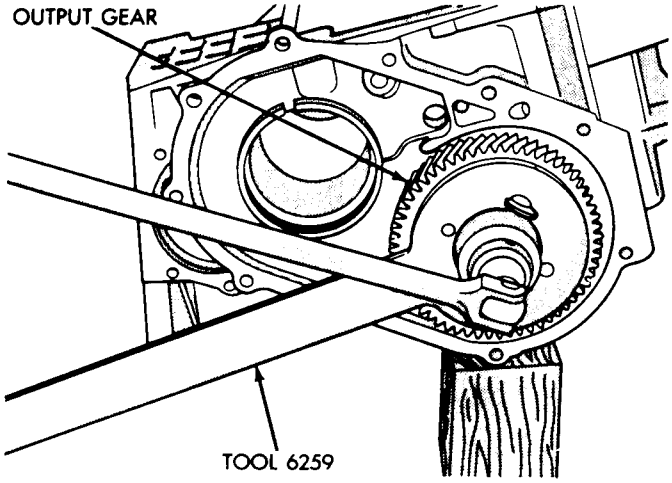

Fig. 43—Remove Output Gear Bolt

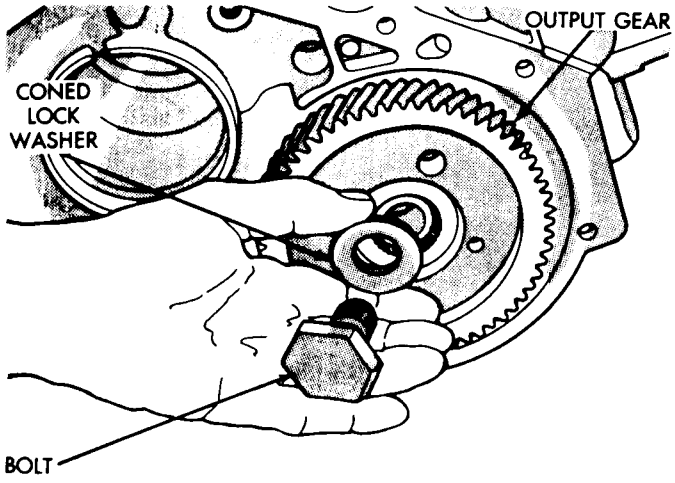

Fig. 44—Output Gear Bolt and Washer

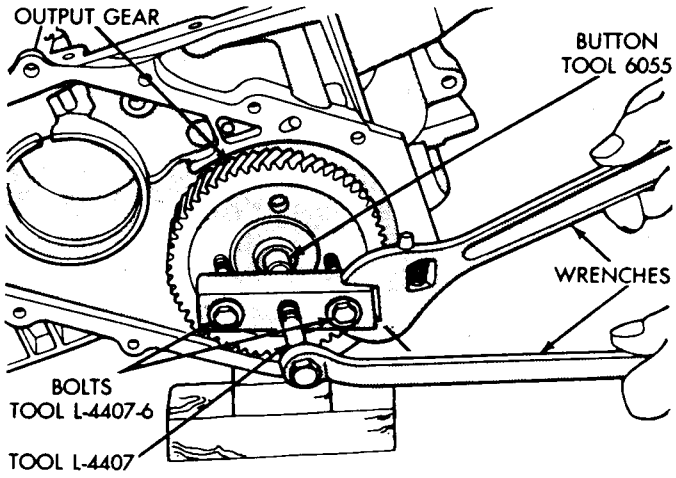

Fig. 45—Remove Output Gear

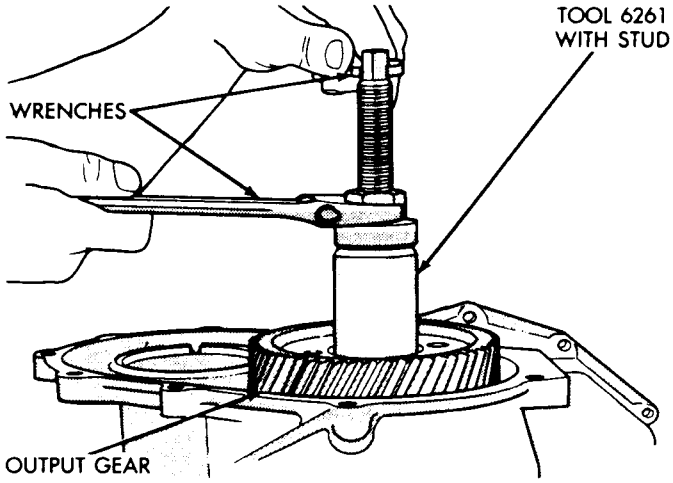

Fig. 46—Install Output Gear

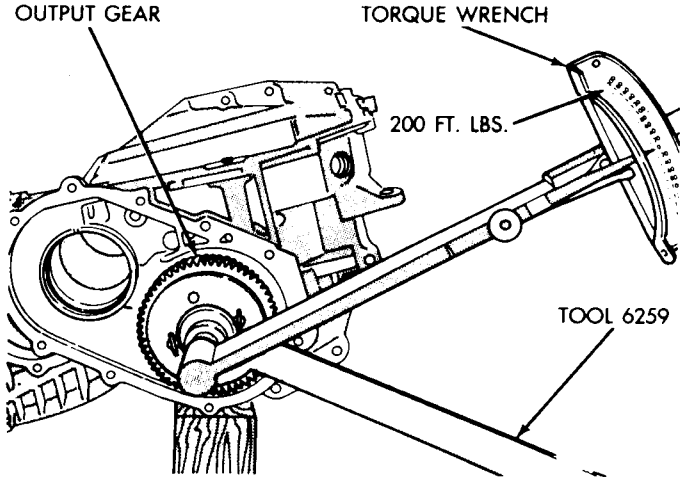

Tighten Output Gear to 271 N·m (200 Ft. Lbs.)

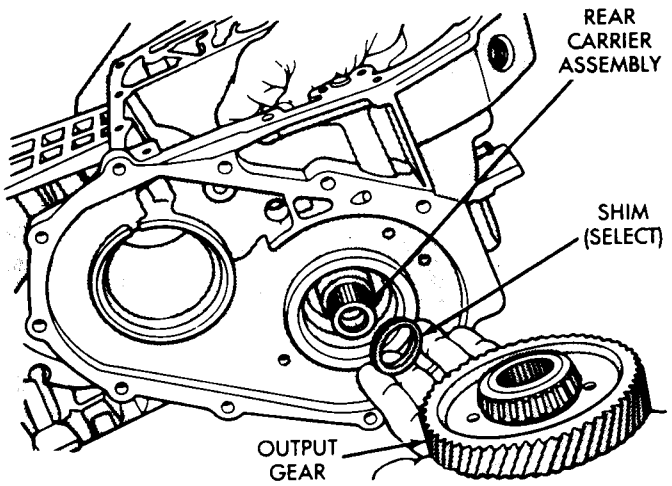

Fig. 47—Output Gear and (Select) Shim

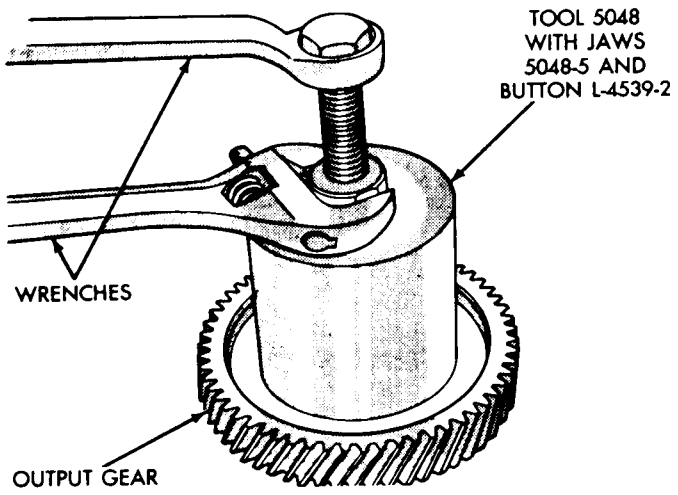

Fig. 48—Remove Bearing Cone

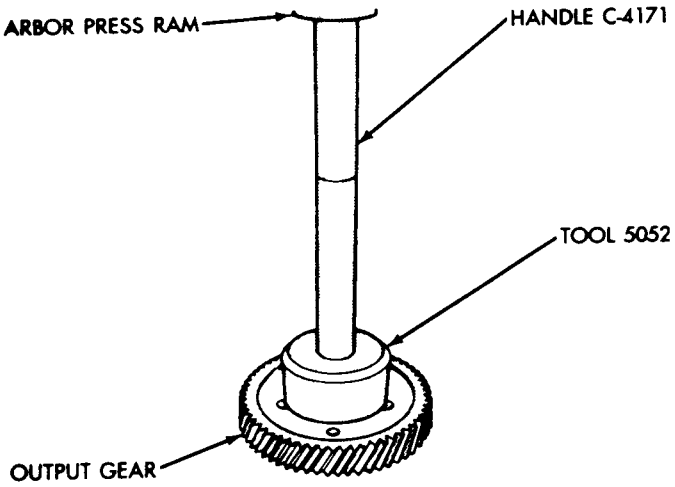

Fig. 49—Install New Bearing Cone

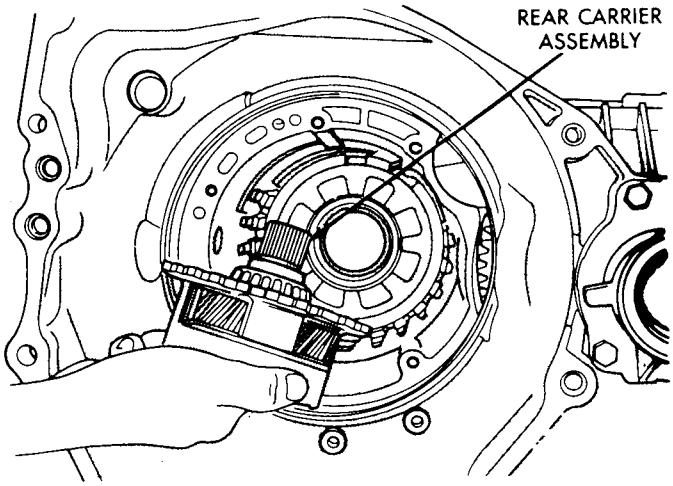

Fig. 50—Rear Carrier Assembly

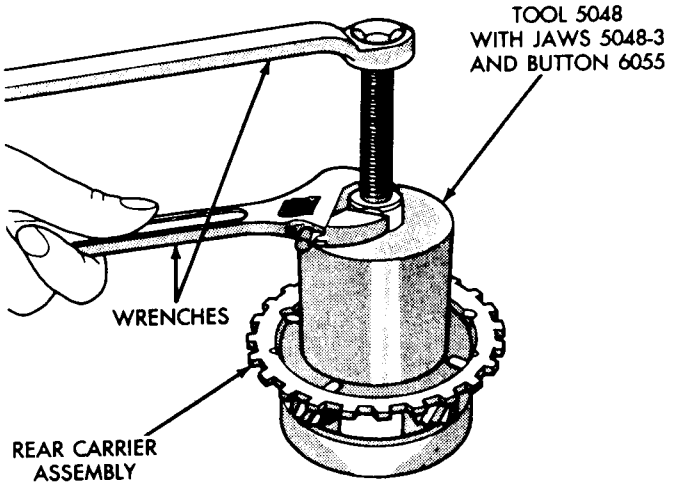

Fig. 51—Remove Rear Carrier Bearing Cone

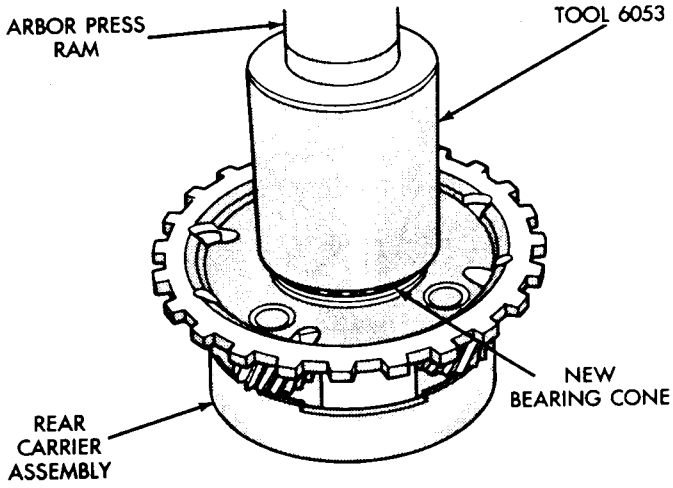

Fig. 52—Install Rear Carrier Bearing Cone

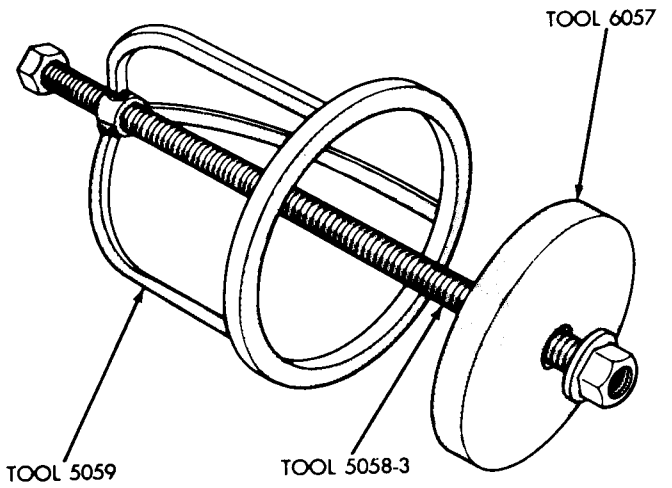

Fig. 53—Low/Reverse Spring Compressor Tool

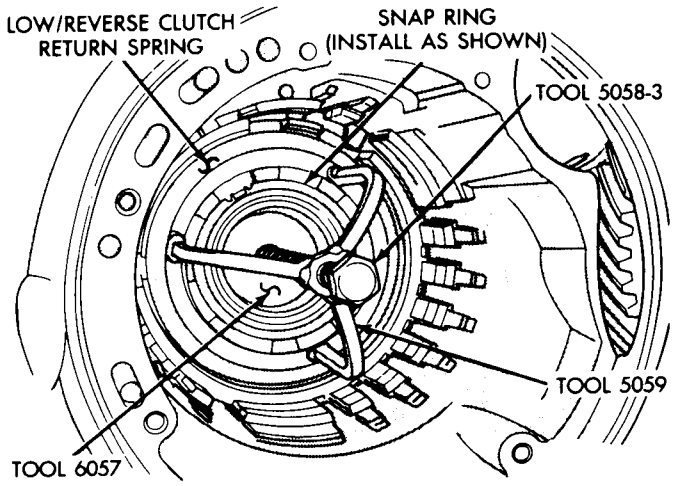

Fig. 54—Compressor Tool in Use

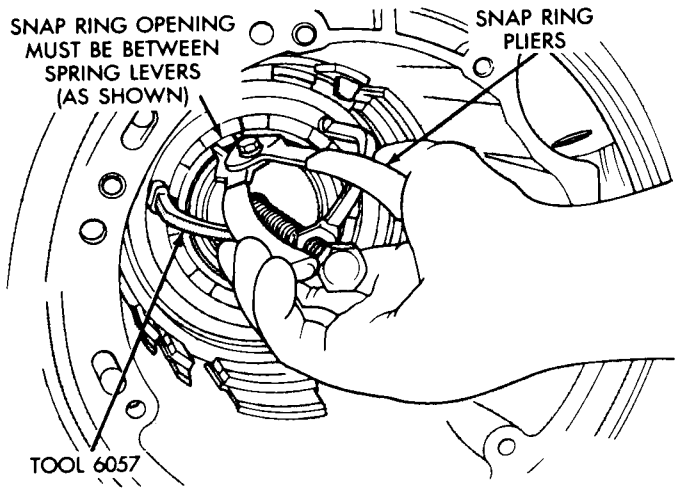

Fig. 55—Remove or Install Snap Ring

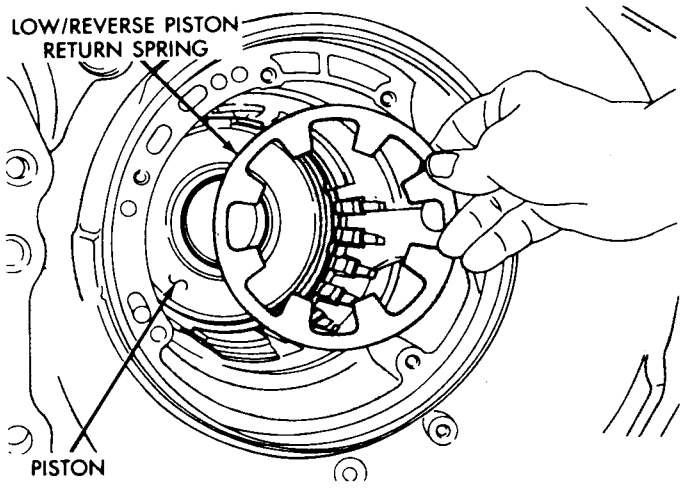

Fig. 56—Low/Reverse Piston Return Spring

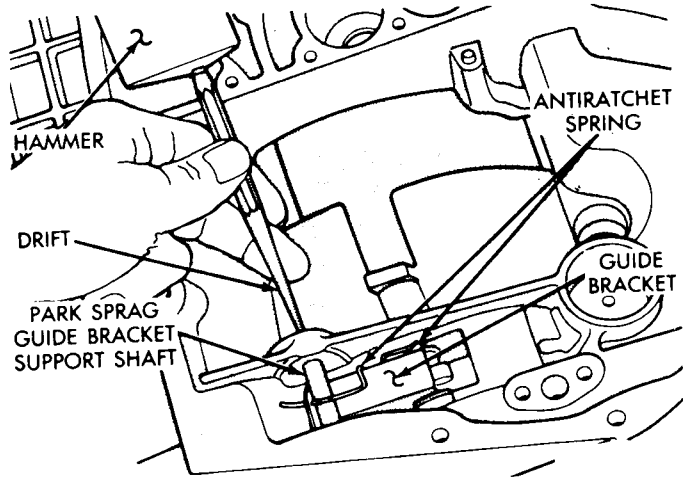

Fig. 57—Drive Out Support Shaft

CAUTION: When installing, be sure guide bracket and split sleeve touch the rear of the transaxle case.

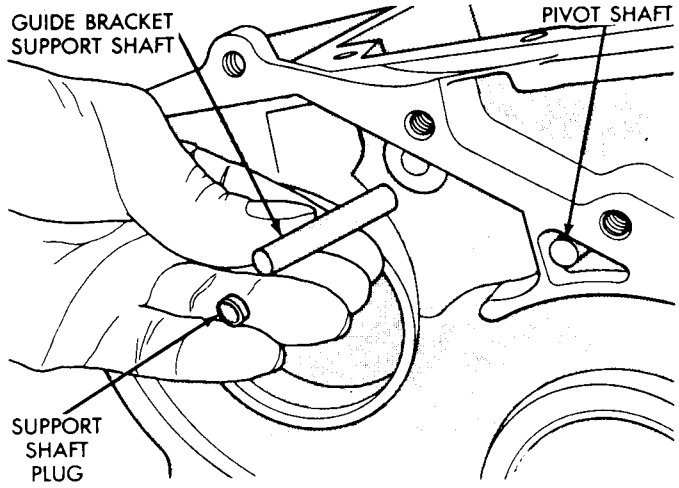

Fig. 58—Support Shaft and Plug

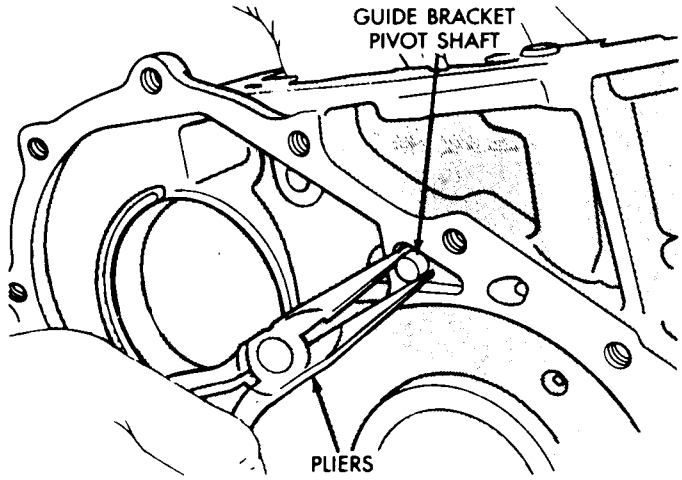

Fig. 59—Guide Bracket Pivot Shaft

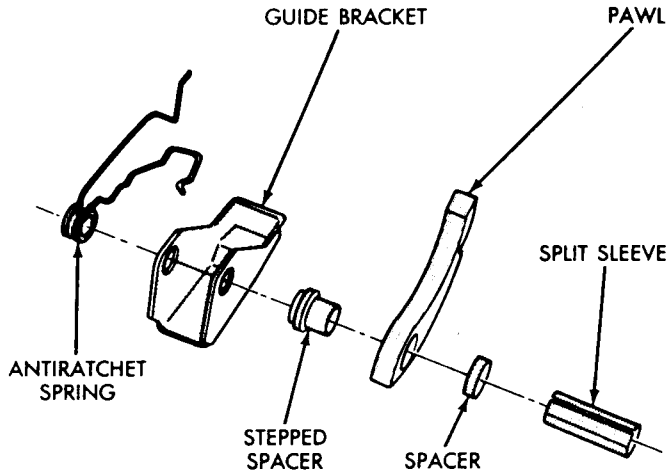

Fig. 62—Guide Bracket Disassembled

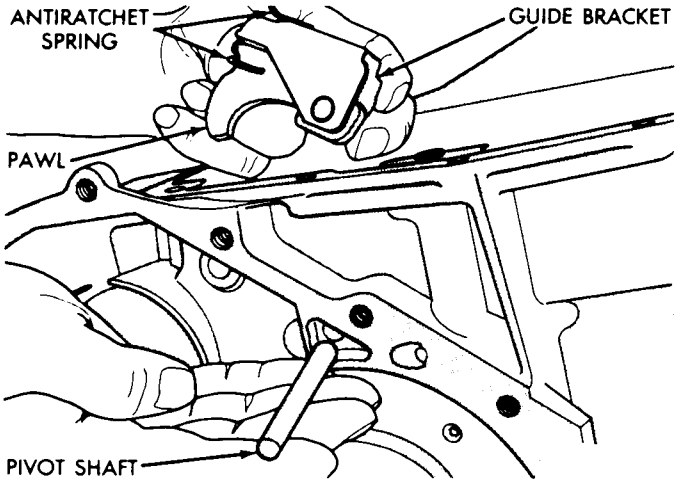

Fig. 60—Pivot Shaft and Guide Bracket

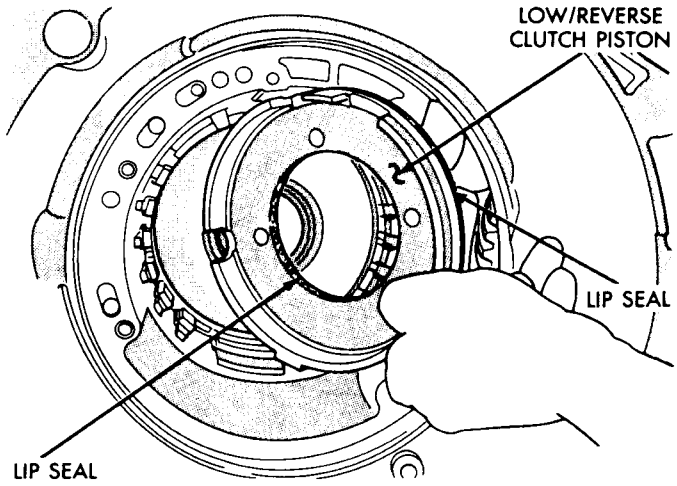

Fig. 63—Low/Reverse Clutch Piston

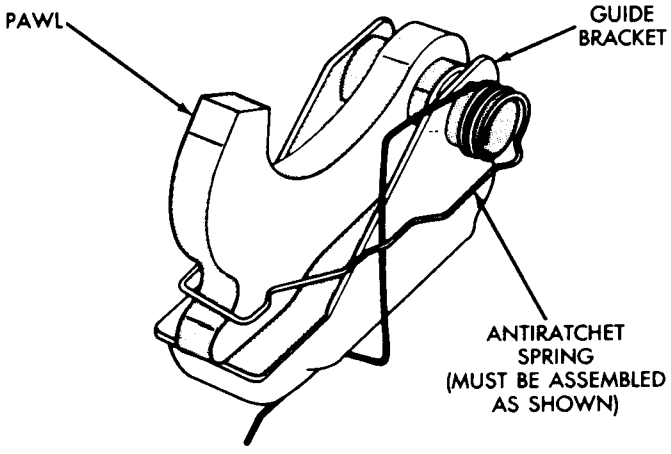

Fig. 61—Guide Bracket Assembled

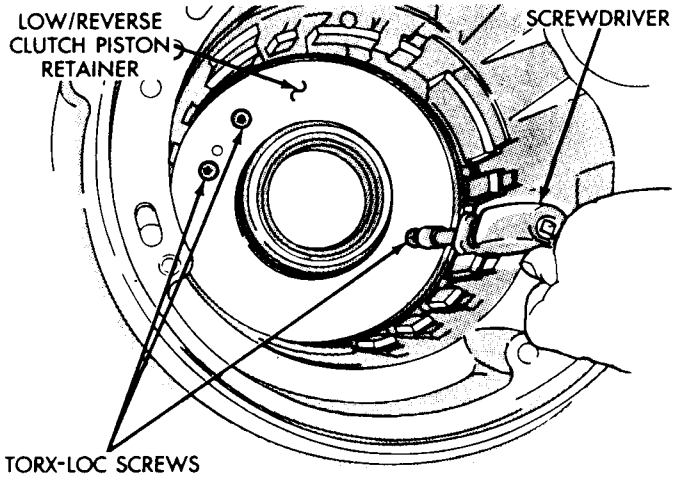

Fig. 64—Piston Retainer Attaching Screws

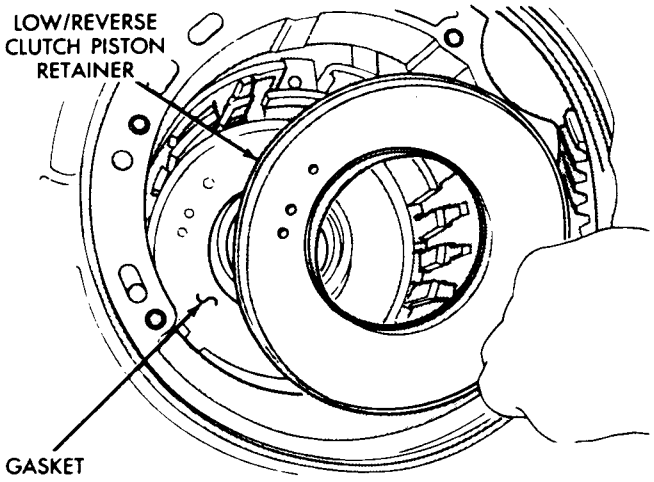

Fig. 65—Piston Retainer

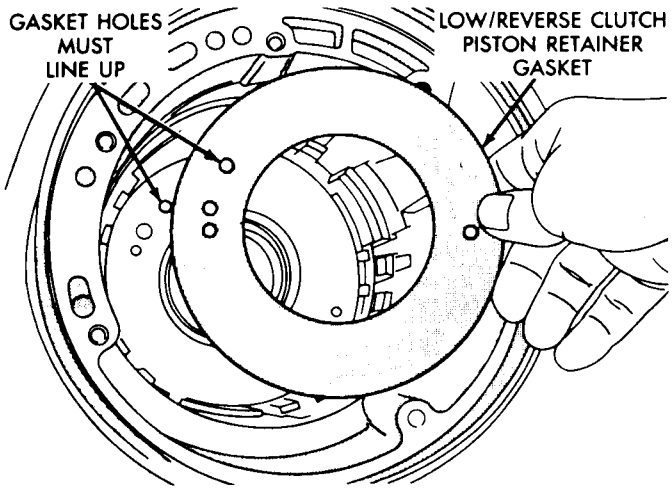

Fig. 66—Piston Retainer Gasket

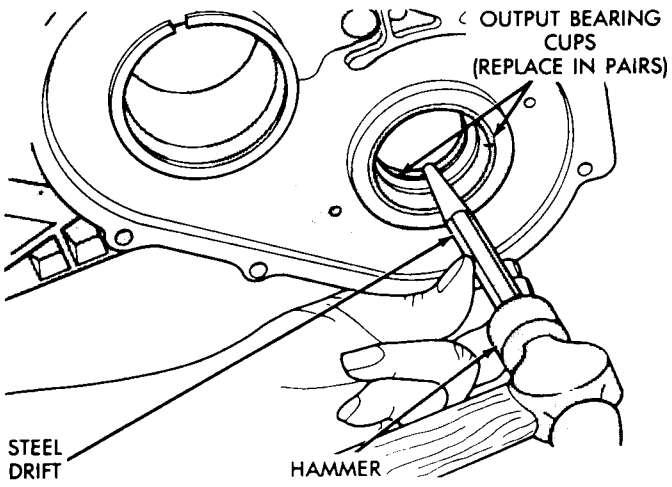

Fig. 67—Remove Both Output Bearing Cups

CAUTION: Drift bearing cups all the way around.

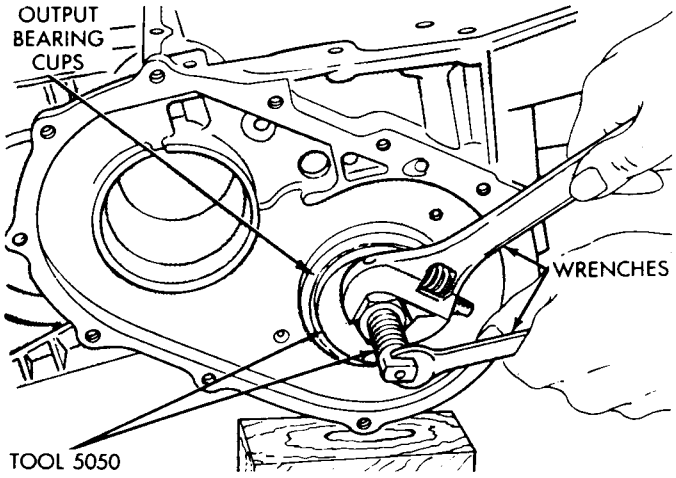

Fig. 68—Install Both Output Bearing Cups

To assemble, reverse the above procedure. Be sure to check both grounded clutch clearances (Figs. 71 and 72). Before installing the input clutches retainer, follow the instructions in "Determining #4 Thrust Plate Thickness" (Figs. 73, 74, 75, 76).

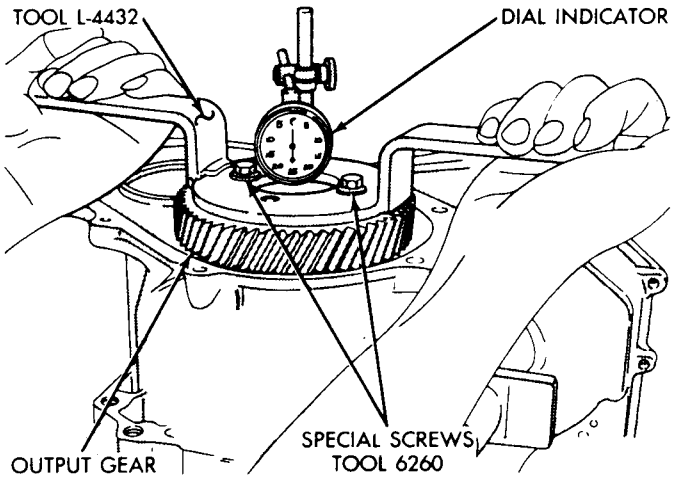

Fig. 69—Checking Output Gear Bearings End Play

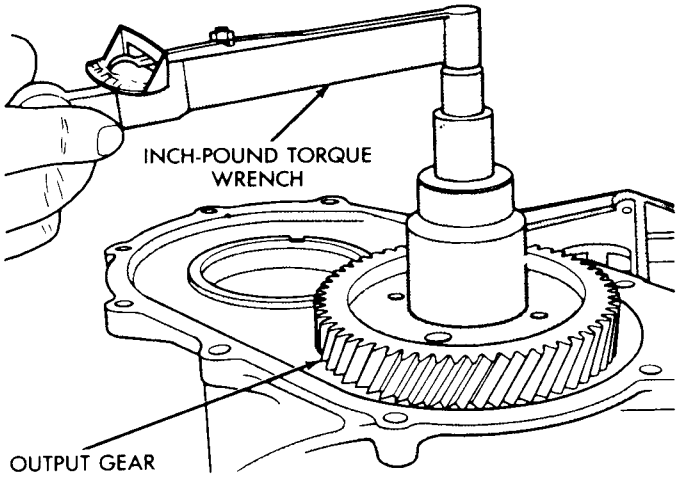

Fig. 70—Checking Output Gear Bearings Turning Torque

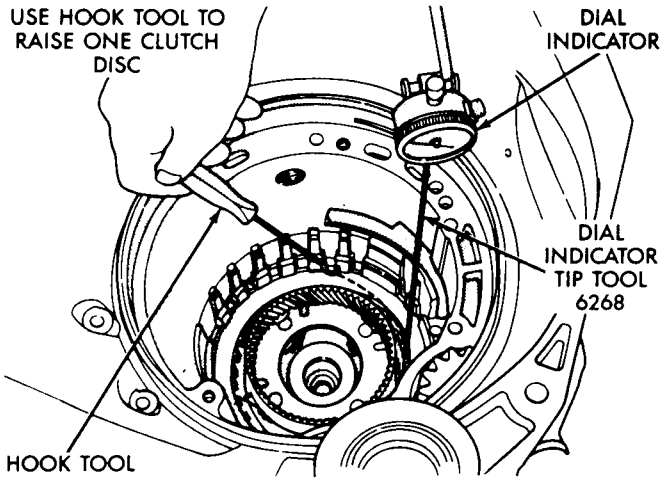

Fig. 71—Check Low/Reverse Clutch Clearance

Press down clutch pack with finger and zero dial indicator. **Low/Reverse clutch pack clearance is 1.04 to 1.65mm (.042 to .065 inch).**

Select the proper low/reverse reaction plate to achieve specifications:

PART NO.	Thickness
4377150	6.92 mm (.273 in.)
4377149	6.66 mm (.262 in.)
4377148	6.40 mm (.252 in.)
4412268	6.14 mm (.242 in.)
4412267	5.88 mm (.232 in.)
4412266	5.62 mm (.221 in.)
4412265	5.36 mm (.211 in.)

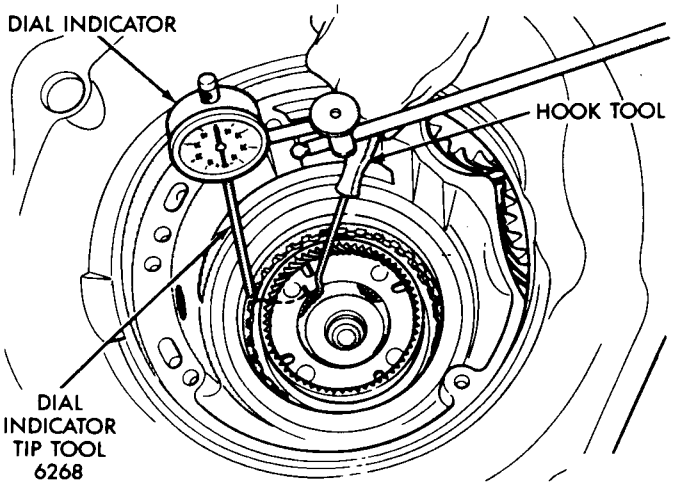

Fig. 72—Check 2/4 Clutch Clearance

Press down clutch pack with finger and zero dial indicator. **The 2/4 clutch pack clearance is 0.76 to 2.64mm (.030 to 104 inch).** If not within specifications, the clutch is not assembled properly. **There is no adjustment for the 2/4 clutch clearance.**

DETERMINING #4 THRUST PLATE THICKNESS (Input Shaft End Play) (Figs. 73, 74, 75, and 76)

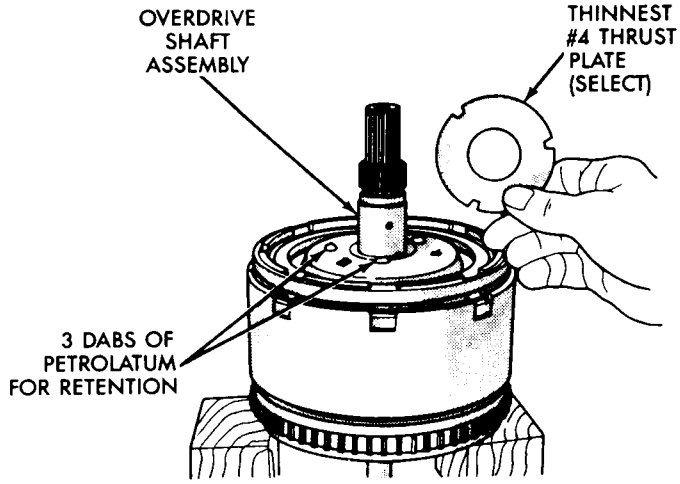

Fig. 73—Select Thinnest #4 Thrust Plate

To determine the proper thickness of the #4 thrust plate, select the thinnest #4 thrust plate. Using petrolatum (Fig. 73) to hold thrust plate in position, install input clutches retainer. Be sure the input clutches retainer is completely seated (Fig. 74).

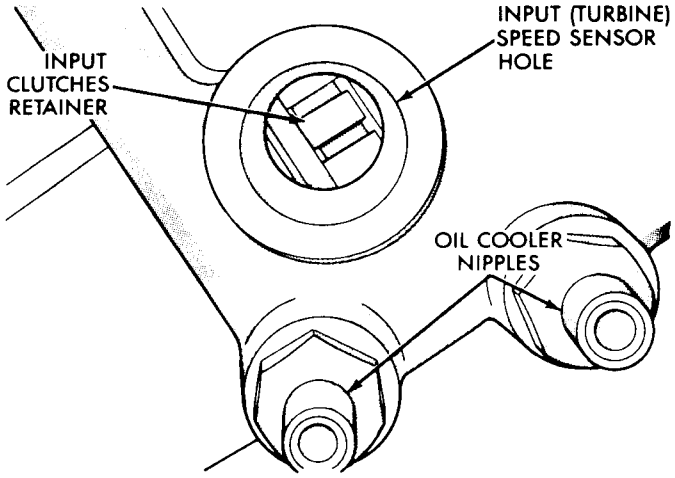

Fig. 74—View Through Input Speed Sensor Hole

CAUTION: If view through input speed sensor hole is not as shown above, the input clutches assembly is not seated properly.

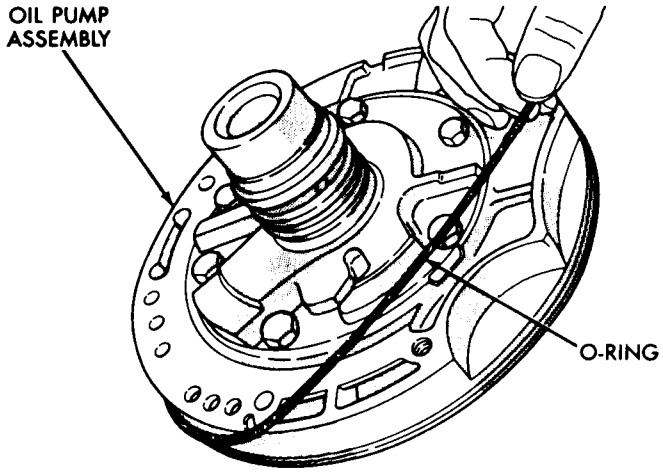

Fig. 75—Remove Oil Pump O-Ring

By removing the oil pump O-ring, you will be able to install and remove the oil pump very easily to select the proper #4 thrust plate.
CAUTION: Be sure to reinstall O-ring on oil pump after selecting the proper #4 thrust plate.

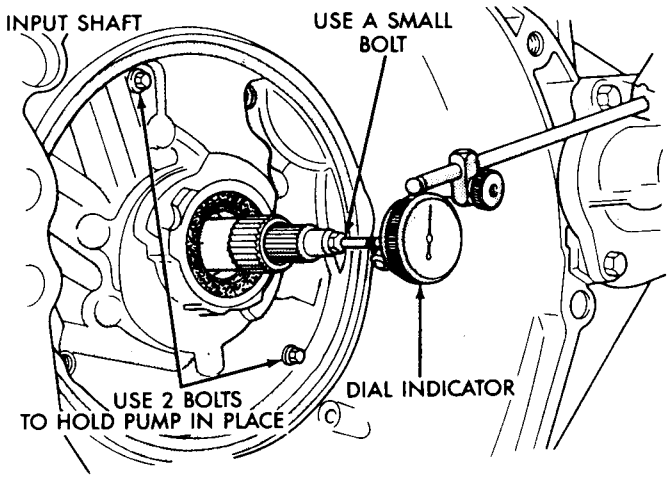

Fig. 76—Measure Input Shaft End Play

Input shaft end play must be .012 to .030 inch.
For example, if end play reading is .055 inch, select #4 Thrust Plate PN 4431666 which is .071 to .074 thick. This should provide an input shaft end play reading of .020 inch which is within specifications.
See chart below to select the proper #4 thrust plate.

SHIM THICKNESS mm	SHIM THICKNESS inch	PART NUMBER
0.93-1.00	.037-.039	4431662
1.15-1.22	.045-.048	4431663
1.37-1.44	.054-.057	4431664
1.59-1.66	.063-.066	4431665
1.81-1.88	.071-.074	4431666
2.03-2.10	.080-.083	4431667
2.25-2.32	.089-.091	4431668
2.47-2.54	.097-.100	4431669
2.69-2.76	.106-.109	4446670
2.91-2.98	.114-.117	4446671
3.13-3.20	.123-.126	4446672
3.35-3.42	.132-.135	4446601

SUBASSEMBLY RECONDITION

Input Shaft Clutches Retainer Assembly

Disassembly

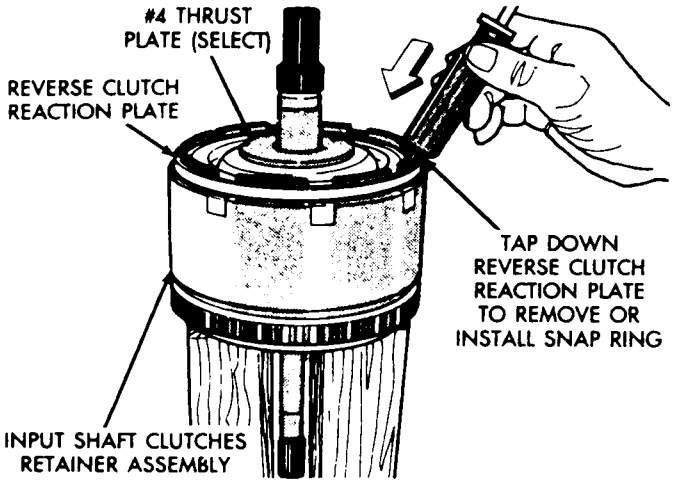

Fig. 1—Tapping Reaction Plate

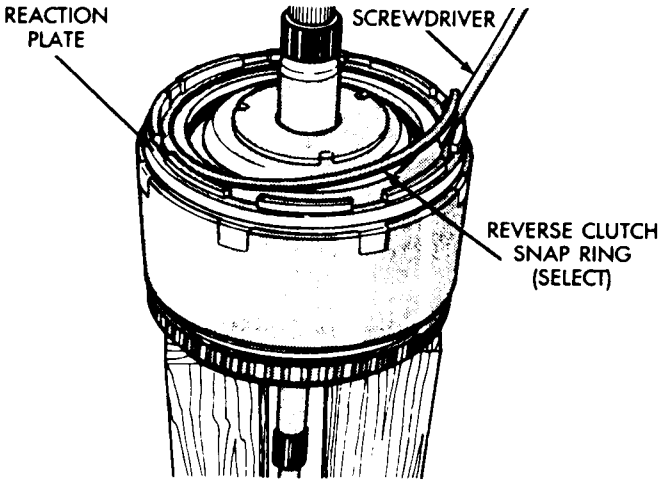

Fig. 2—Reverse Clutch Snap Ring

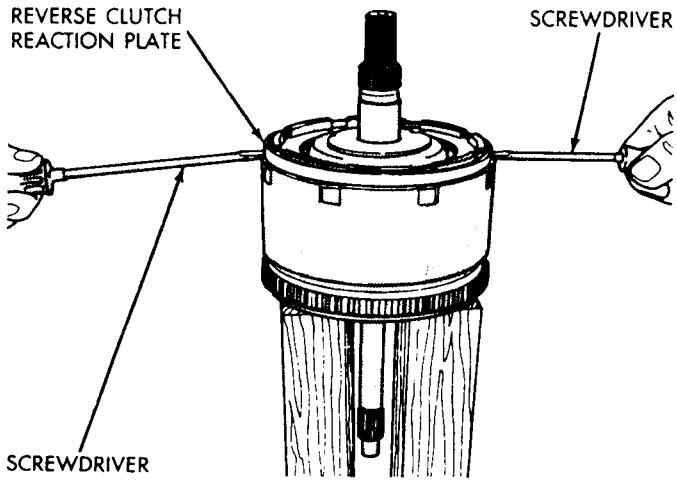

Fig. 3—Pry Reverse Clutch Reaction Plate

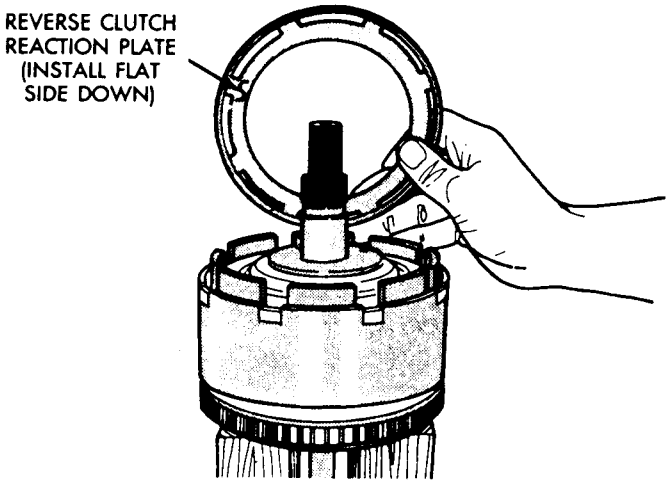

Fig. 4—Reverse Clutch Reaction Plate

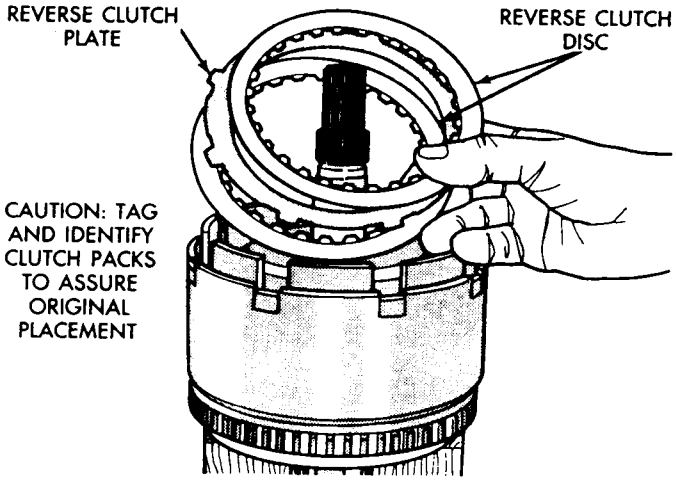

Fig. 5—Reverse Clutch Pack

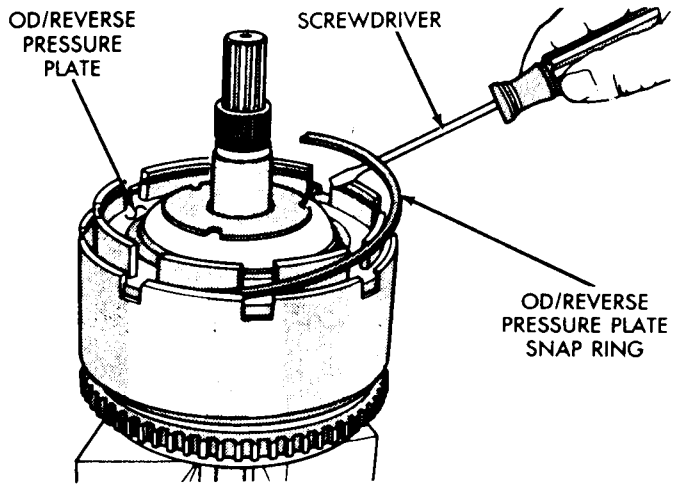

Fig. 6-OD/Reverse Pressure Plate Snap Ring

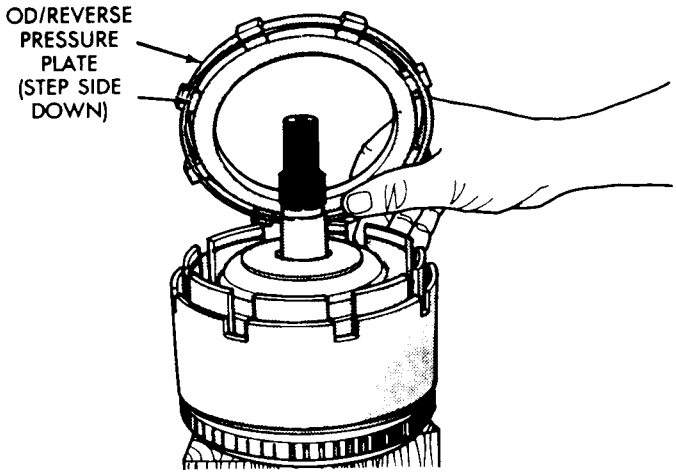

Fig. 7—OD/Reverse Presssure Plate

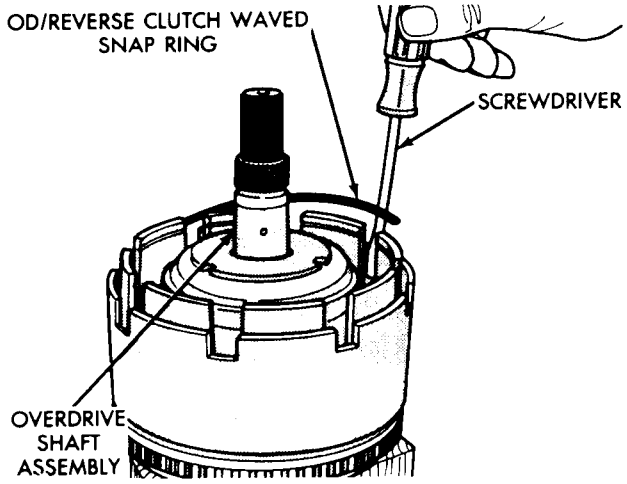

Fig. 8—Waved Snap Ring

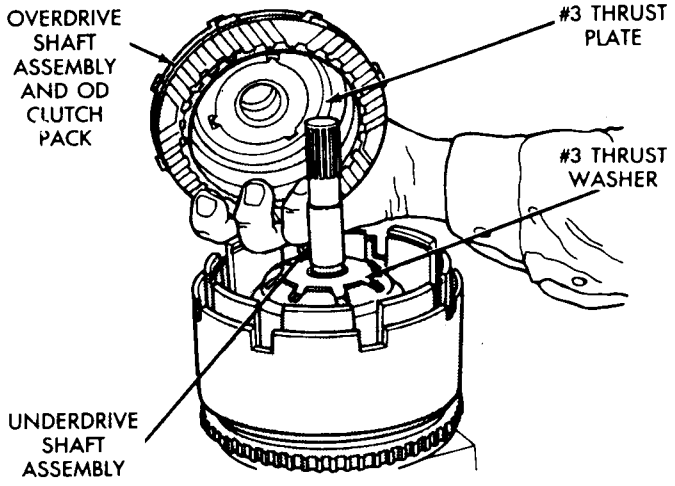

Fig. 9—Remove OD Clutch Pack

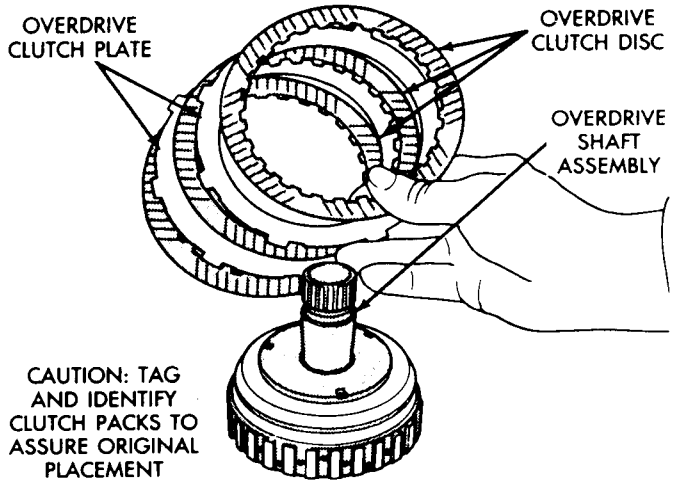

Fig. 10—Overdrive Clutch Pack

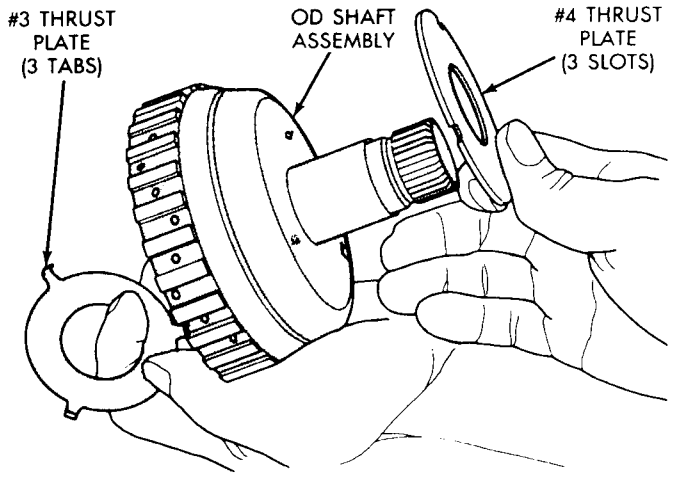

Fig. 11—Overdrive Shaft Assembly

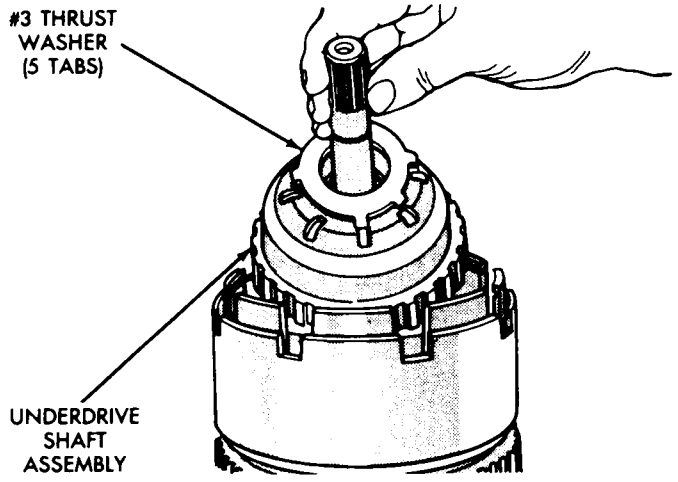

Fig. 12—Underdrive Shaft Assembly

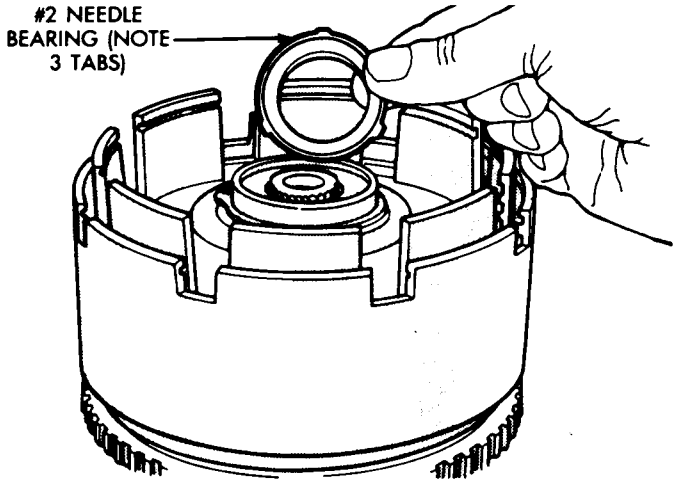

Fig. 13—#2 Needle Bearing

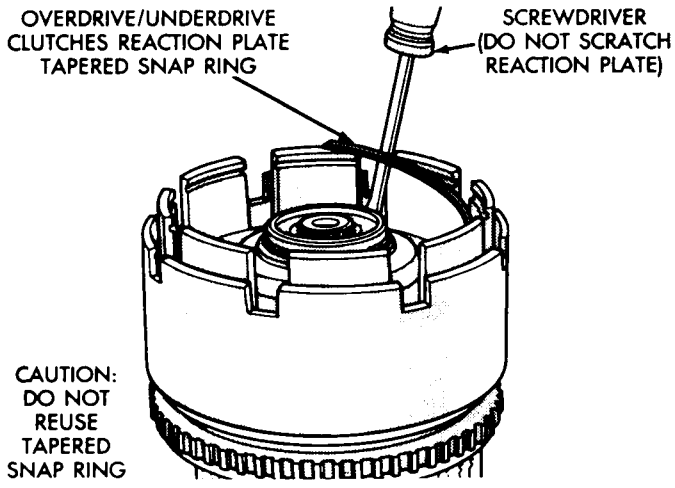

Fig. 14—OD/UD Reaction Plate Tapered Snap Ring

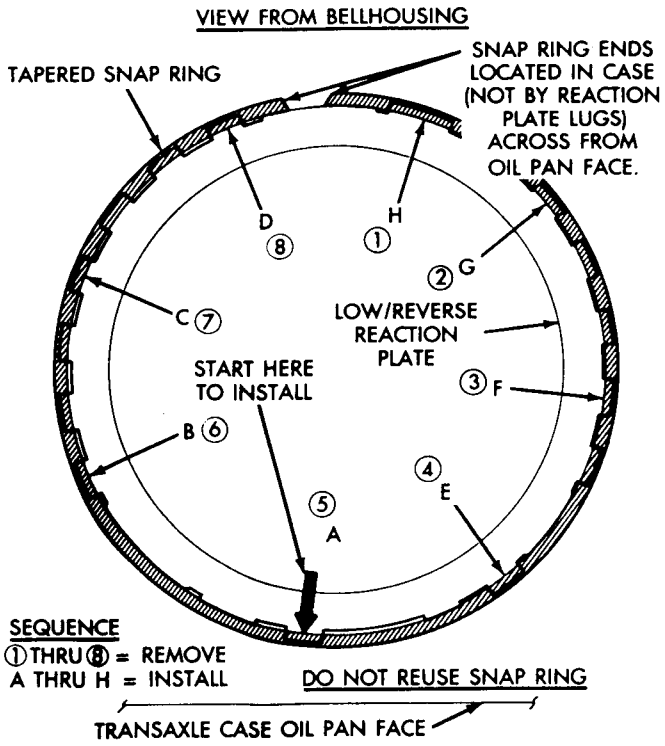

Fig. 15—Tapered Snap Ring Instructions

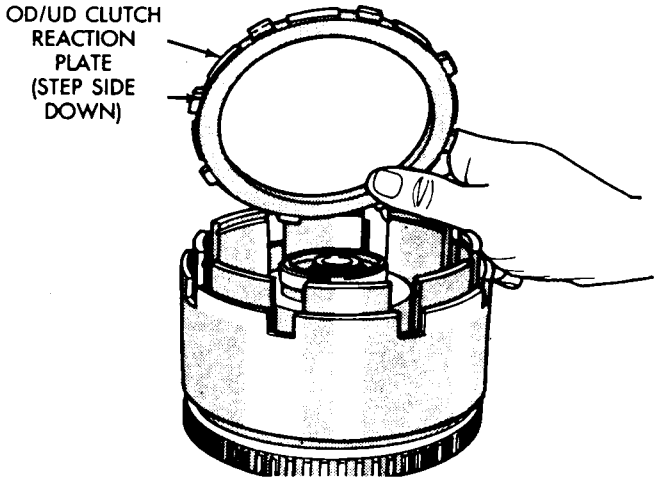

Fig. 16—OD/UD Reaction Plate

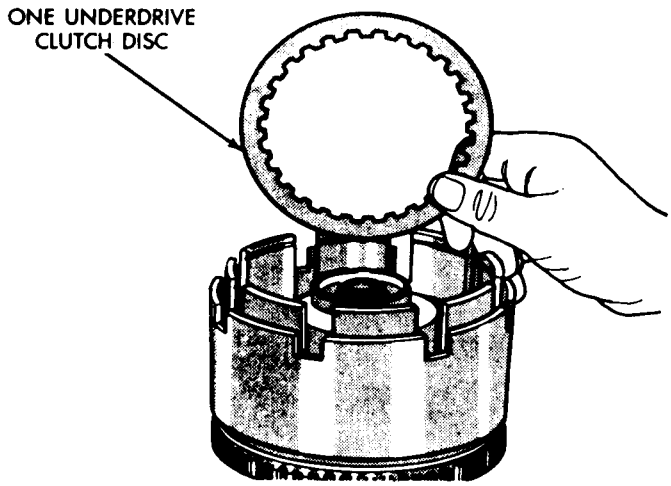

Fig. 17—Remove One UD Clutch Disc

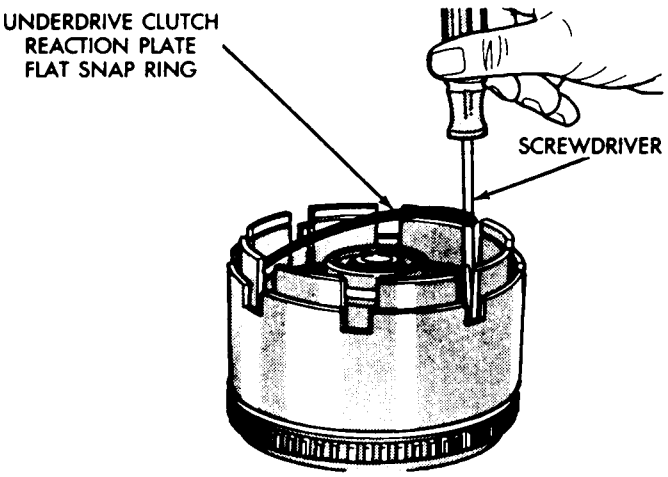

Fig. 18—UD Clutch Flat Snap Ring

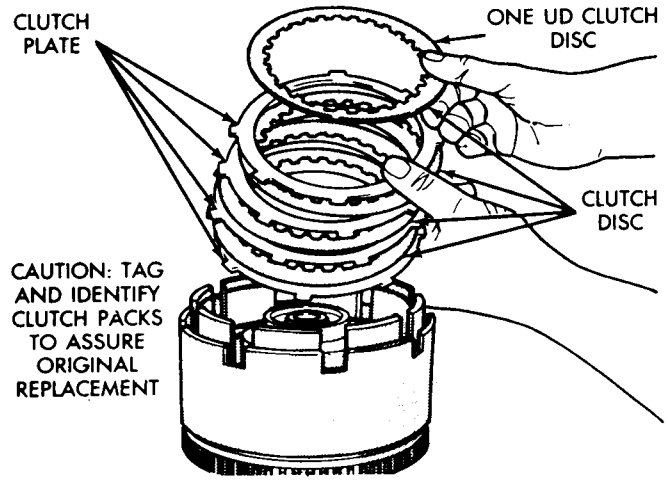

Fig. 19—Underdrive Clutch Pack

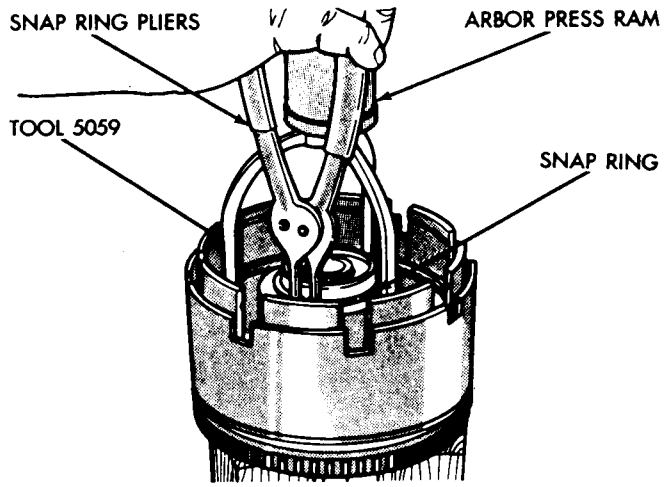

Fig. 20—UD Spring Retainer Snap Ring

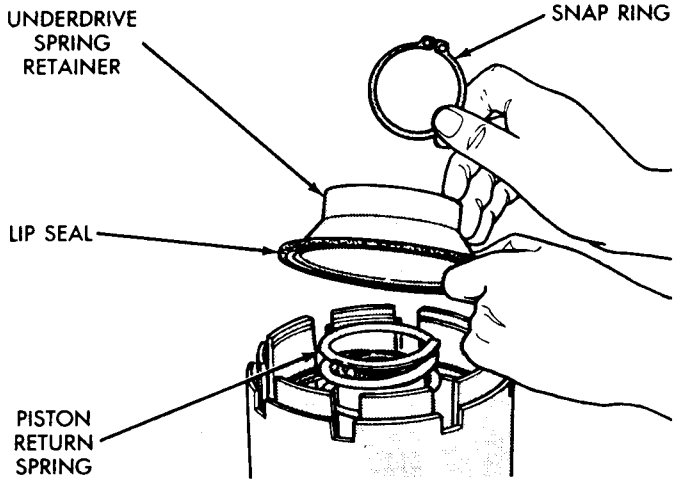

Fig. 21—UD Return Spring and Retainer

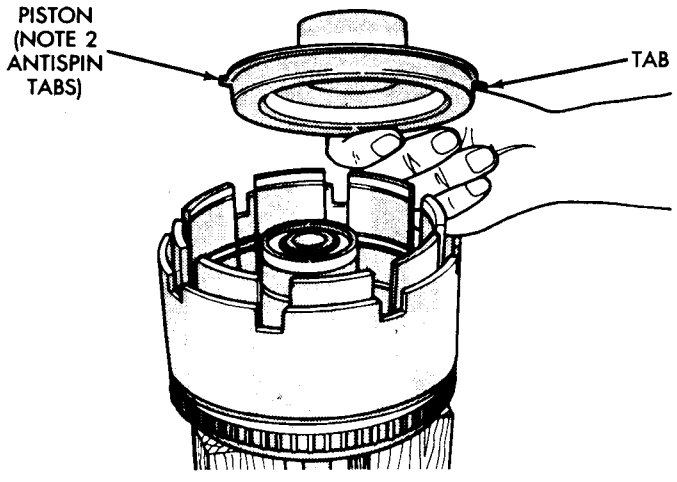

Fig. 22—Underdrive Clutch Piston

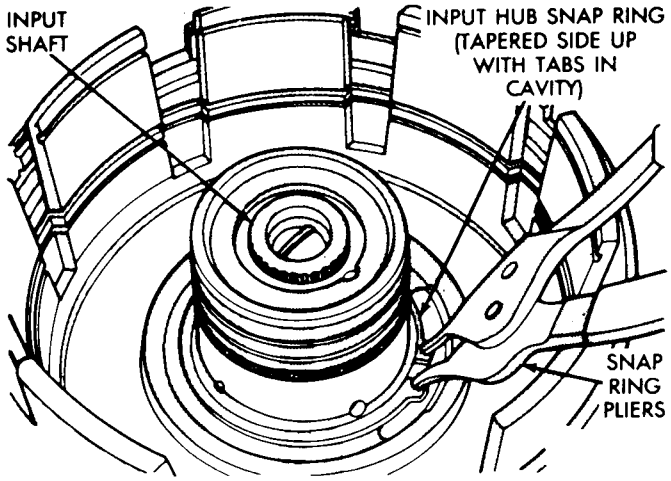

Fig. 23—Input Hub Tapered Snap Ring

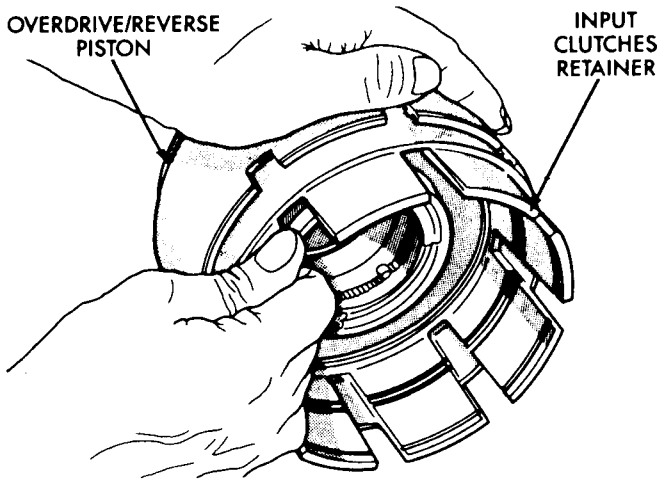

Fig. 26—Pull Retainer from Piston

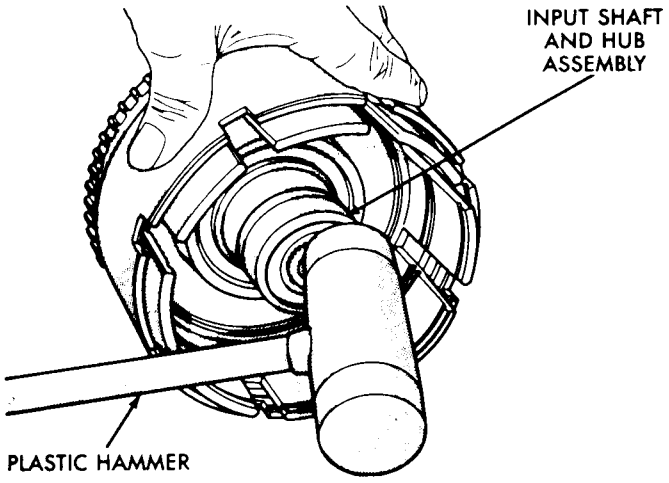

Fig. 24—Tap on Input Hub

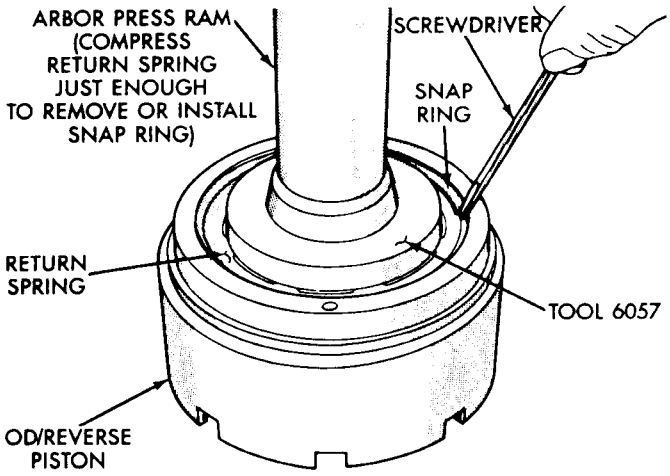

Fig. 27—Install Snap Ring

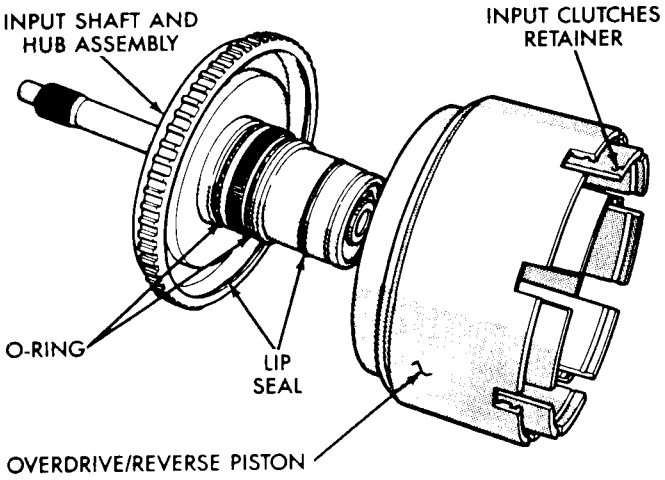

Fig. 25—Input Hub Removed

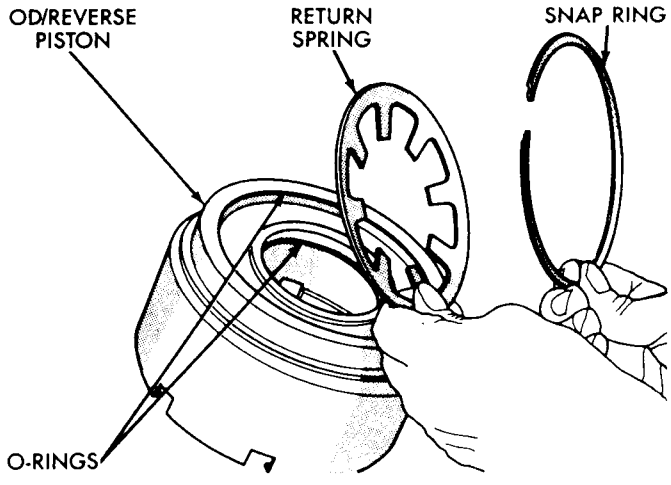

Fig. 28—Snap Ring and Return Spring

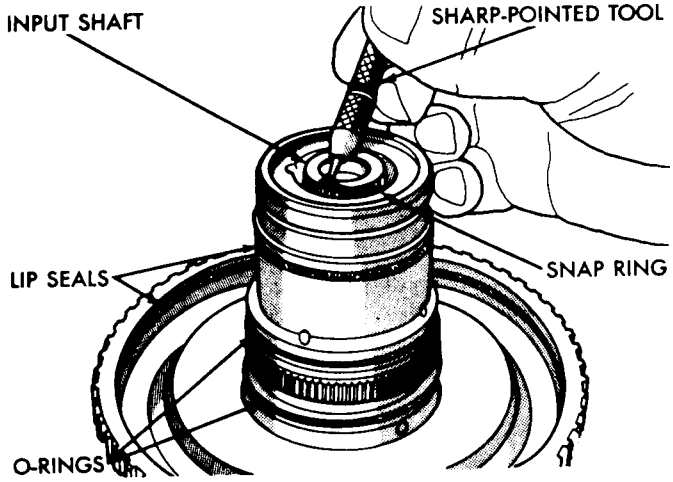

Fig. 29—Remove Input Shaft Snap Ring

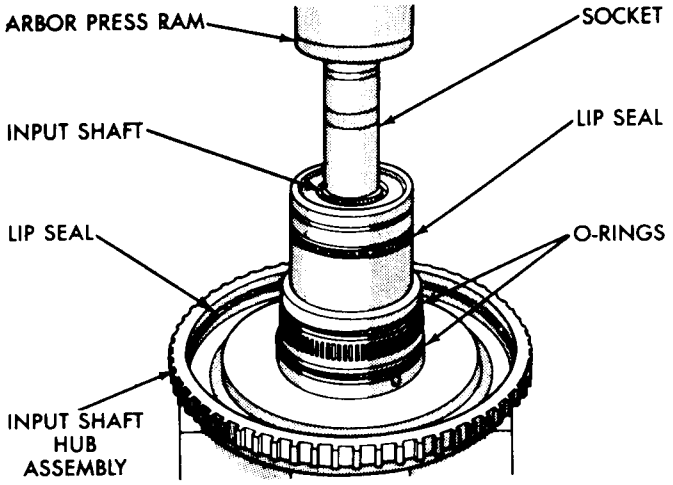

Fig. 30—Remove Input Shaft

Assembly

Use petrolatum on all seals to ease assembly of components.

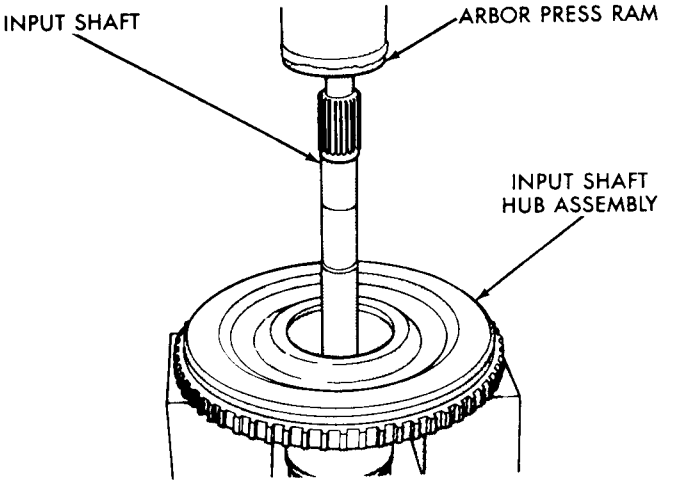

Fig. 1—Install Input Shaft

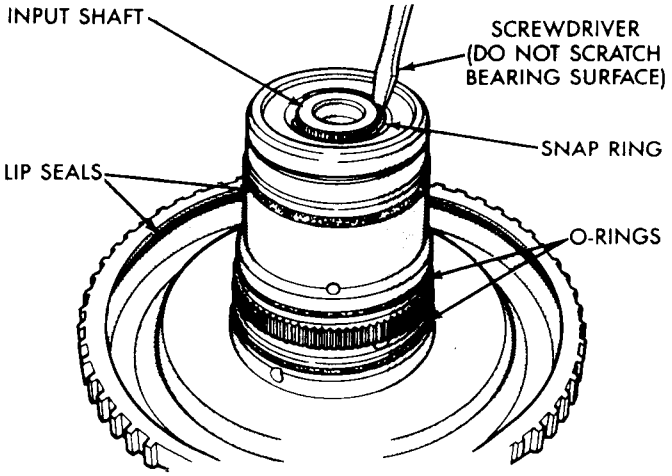

Fig. 2—Install Input Shaft Snap Ring

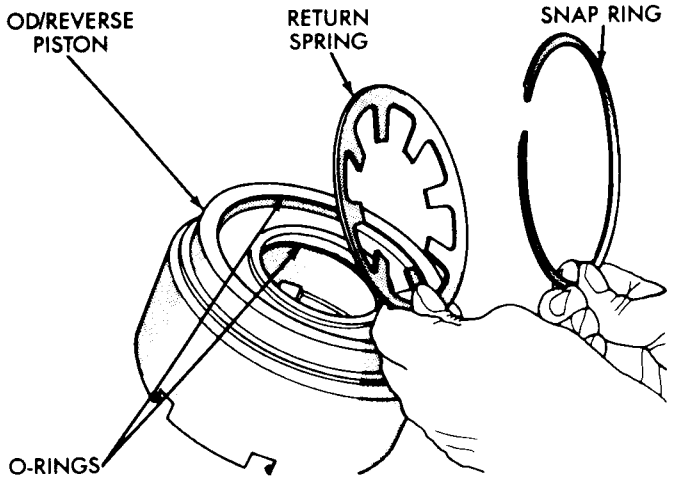

Fig. 3—Return Spring and Snap Ring

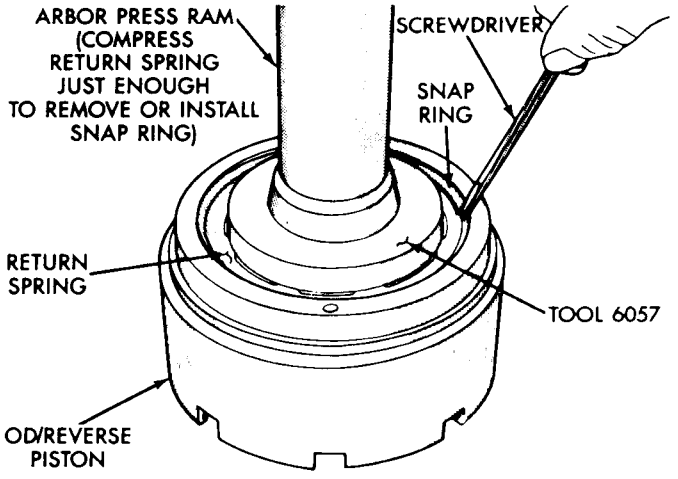

Fig. 4—Install Snap Ring

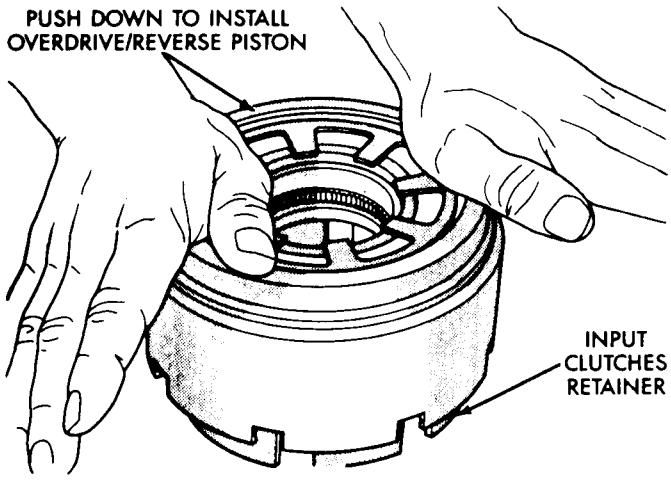

Fig. 5—Install OD/Reverse Piston

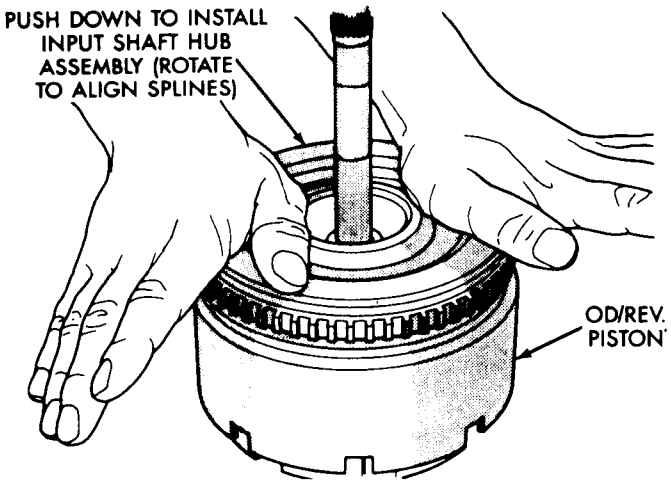

Fig. 6—Install Input Shaft Hub Assembly

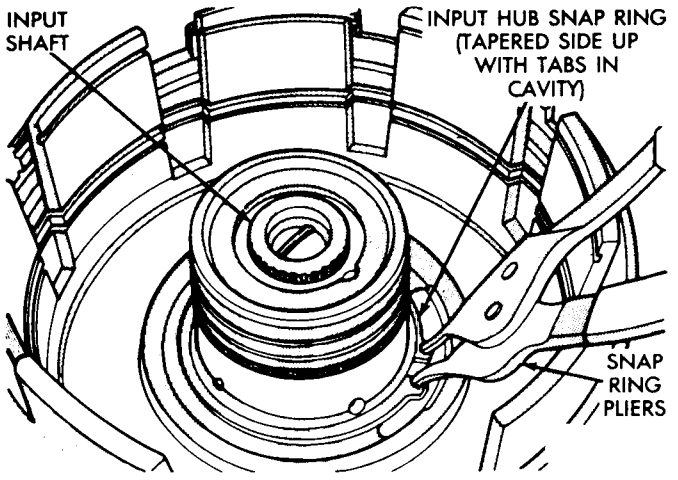

Fig. 7—Input Hub Tapered Snap Ring

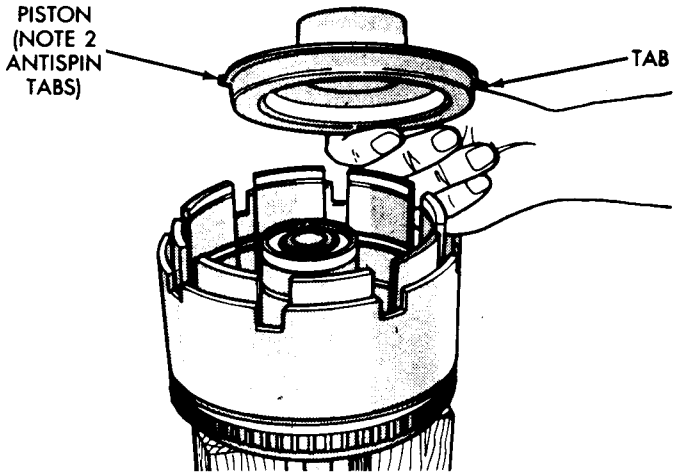

Fig. 8—Underdrive Clutch Piston

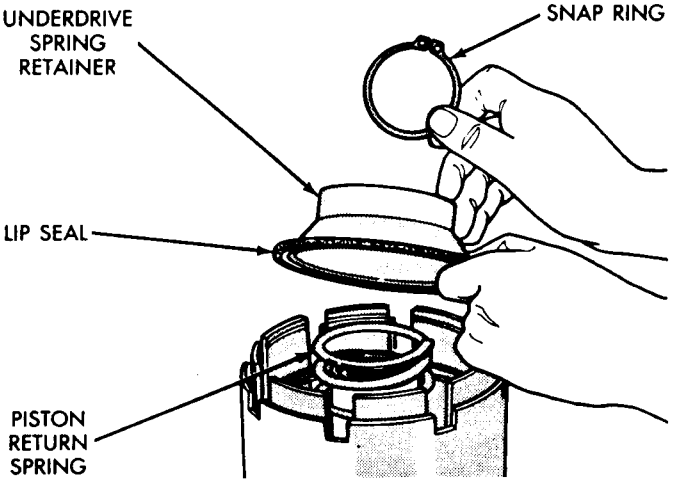

Fig. 9—UD Return Spring and Retainer

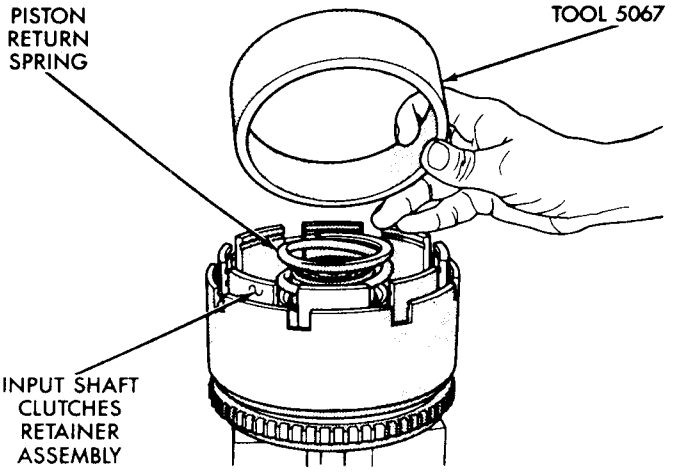

Fig. 10—Seal Compressor Tool 5067

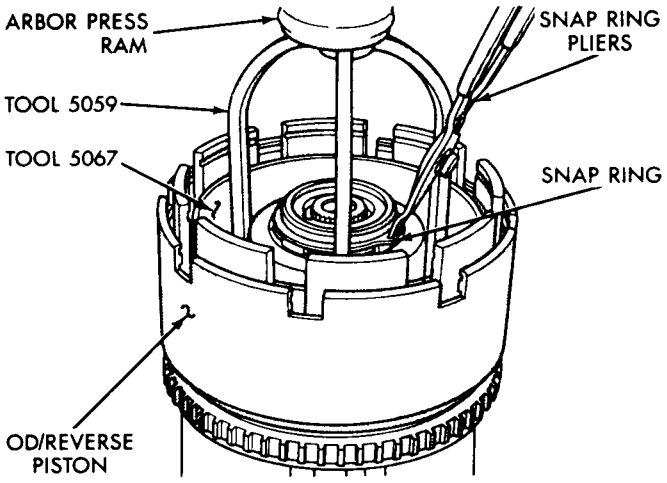

Fig. 11—Install UD Spring Retainer and Snap Ring

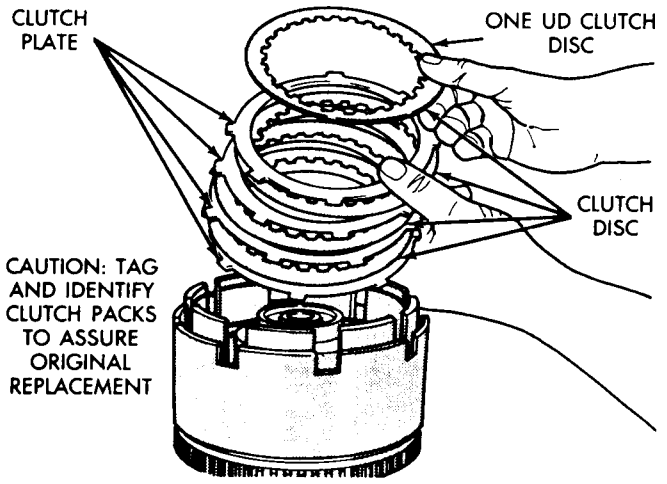

Fig. 12—Underdrive Clutch Pack

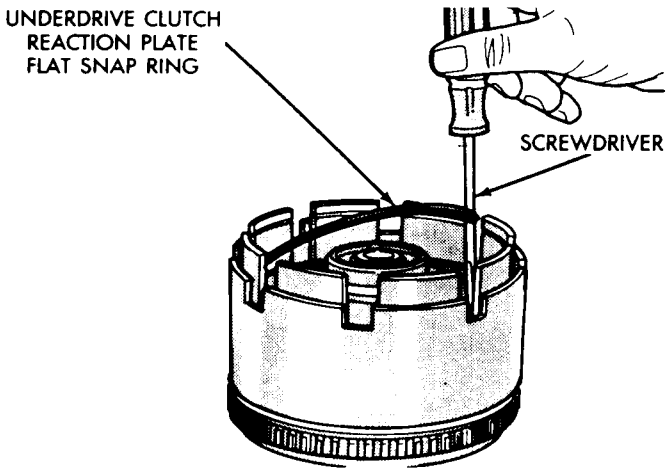

Fig. 13—UD Clutch Flat Snap Ring

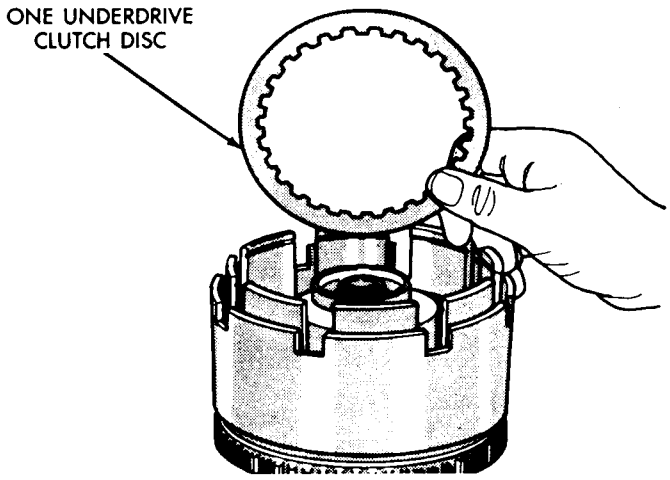

Fig. 14—Install Last UD Clutch Disc

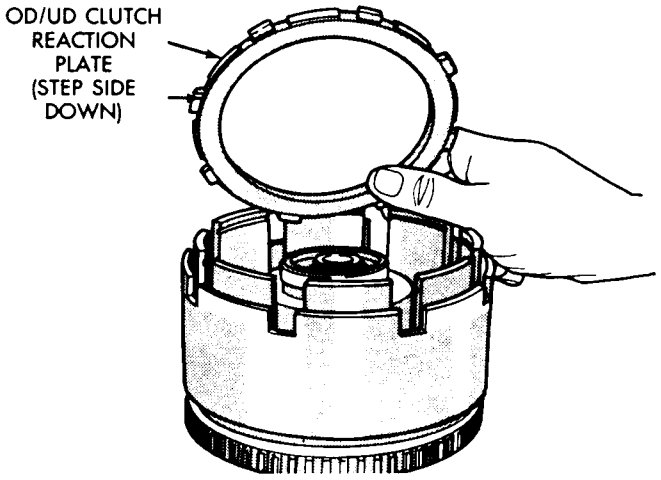

Fig. 15—OD/UD Reaction Plate

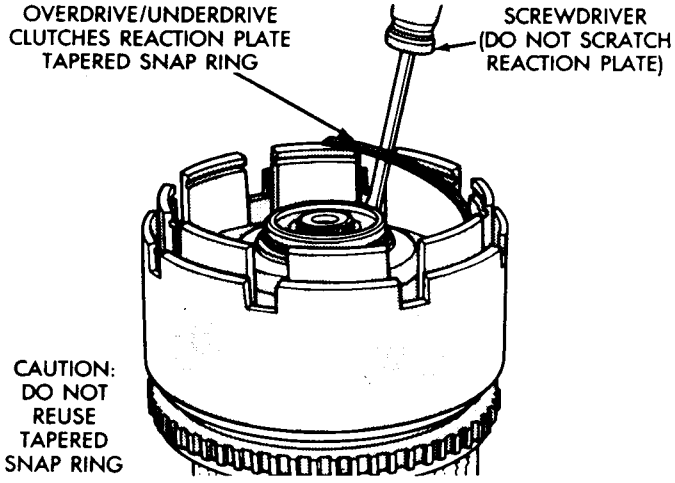

Fig. 16—Tapered Snap Ring

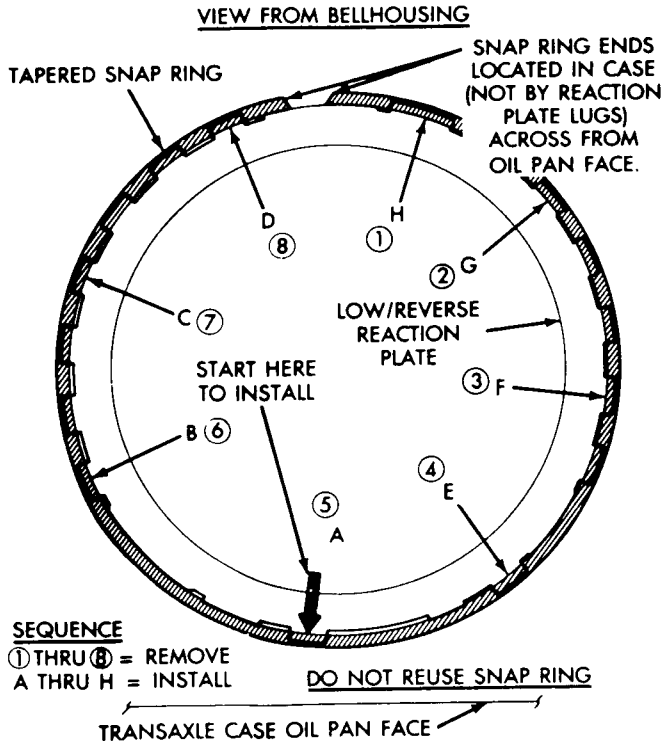

Fig. 17—Tapered Snap Ring Instructions

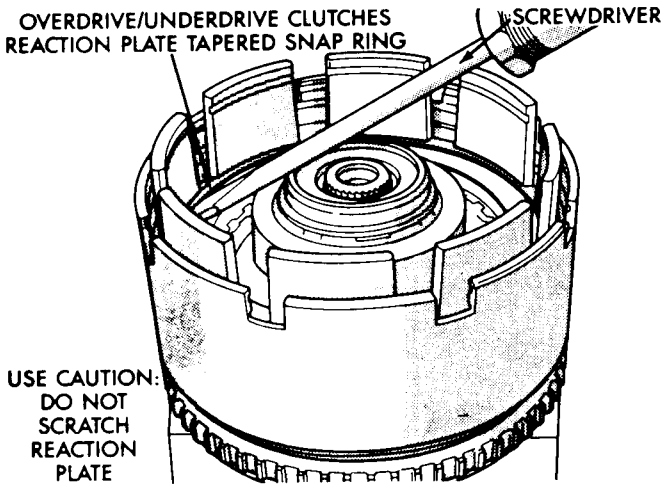

Fig. 18—Seating Tapered Snap Ring

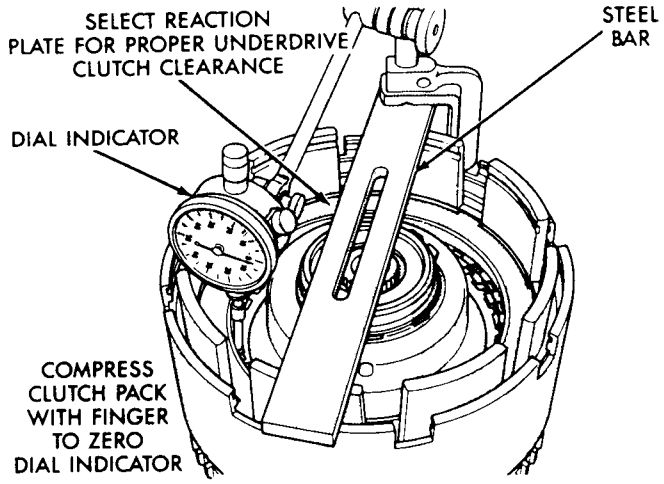

Fig. 19—Set Up Dial Indicator for Clutch Clearance

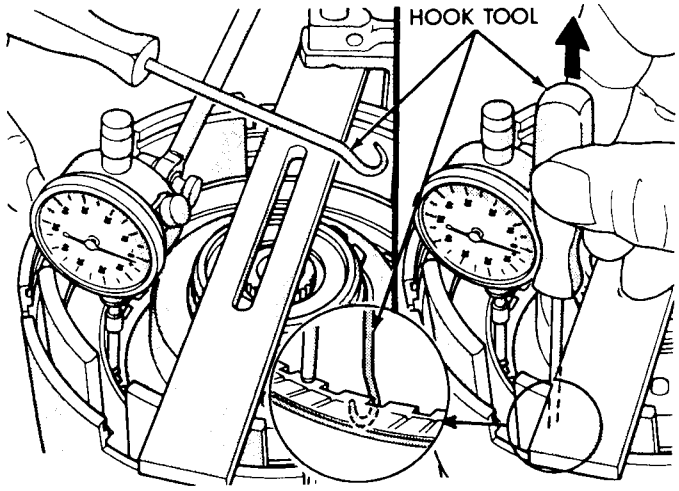

Fig. 20—Use Hook Tool to Raise One Clutch Disc

Underdrive clutch pack clearance must be 0.91 to 1.47mm (.036 to .058 inch). Select the proper reaction plate to achieve specifications:

PART NO.	THICKNESS
4377185	6.52 mm (.257 in.)
4377186	7.01 mm (.276 in.)
4377187	7.50 mm (.295 in.)
4377188	7.99 mm (.315 in.)

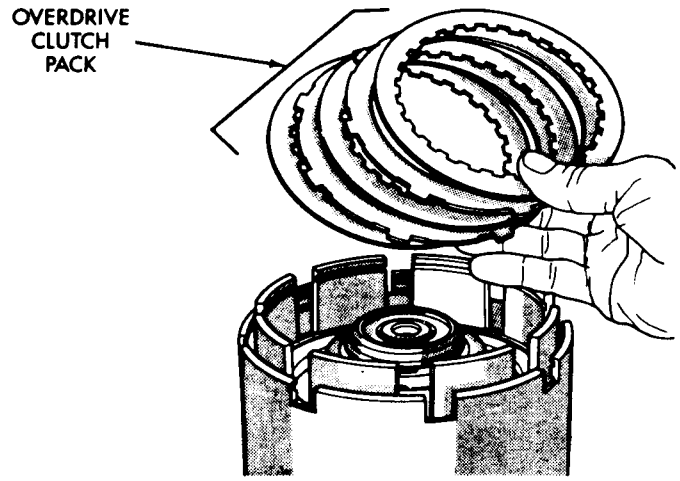

Fig. 21—Install OD Clutch Pack

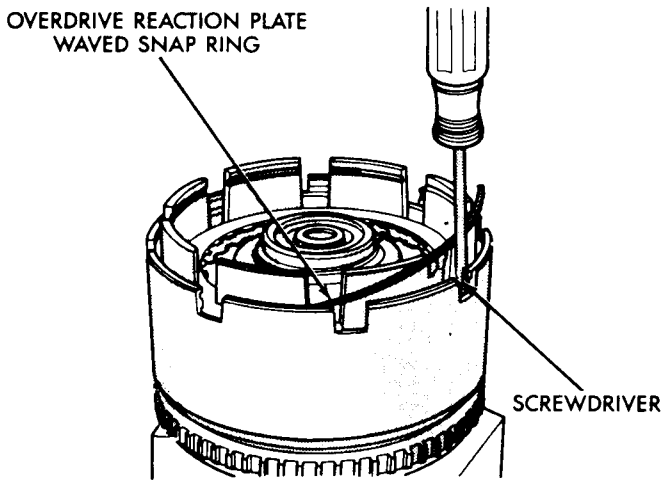

Fig. 22—Install Waved Snap Ring

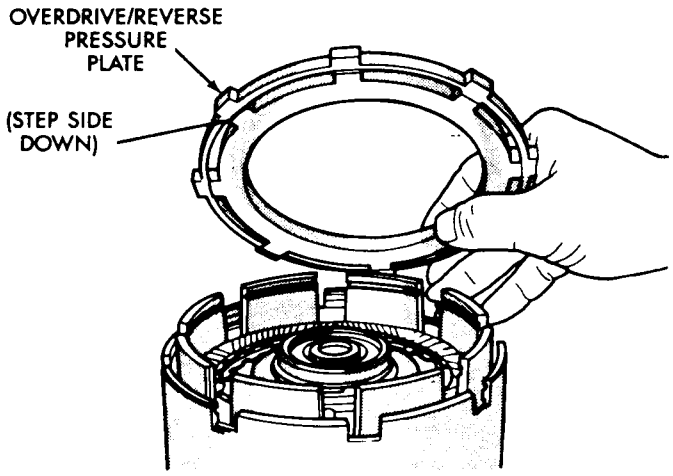

Fig. 23—OD/Reverse Pressure Plate

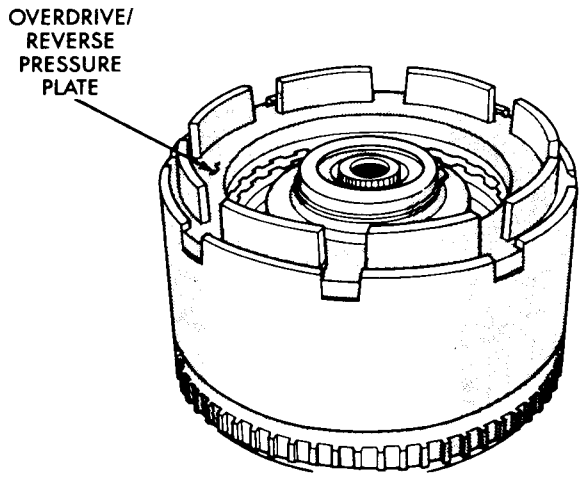

Fig. 24—Pressure Plate Installed

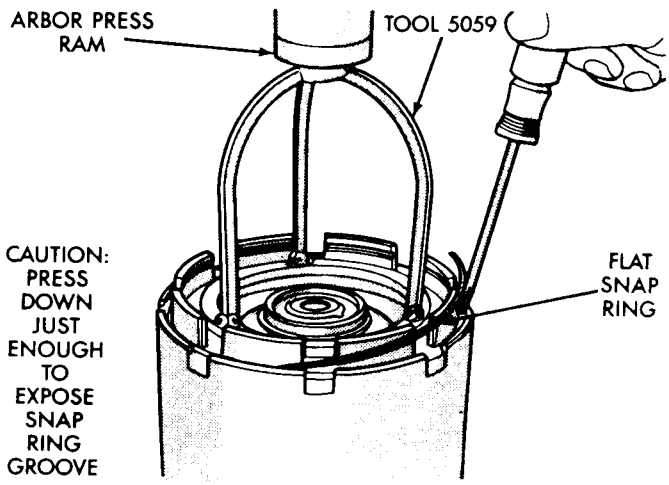

Fig. 25—Install Flat Snap Ring

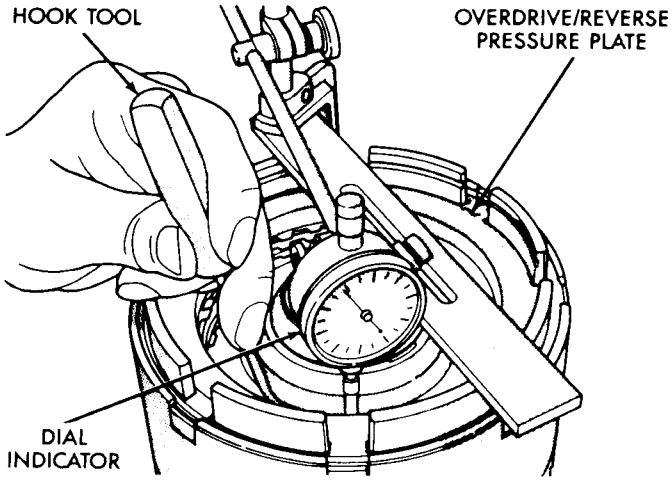

Fig. 26—Check OD Clutch Pack Clearance

The overdrive (OD) clutch pack clearance is .042 to .096 inch. If not within specifications, the clutch is not assembled properly. There is no adjustment for the OD clutch clearance.

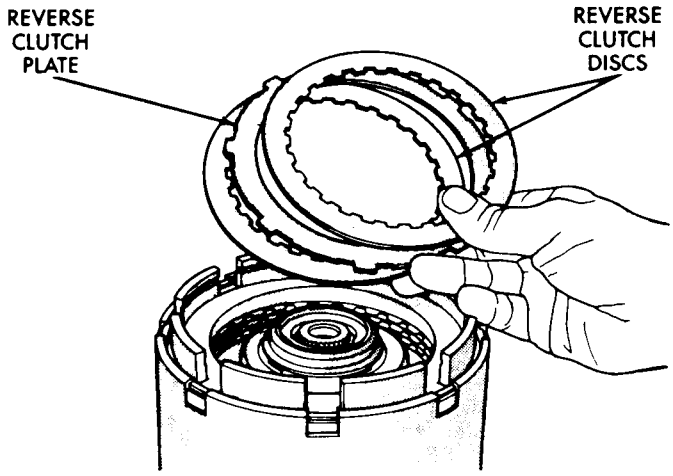

Fig. 27—Install Reverse Clutch Pack

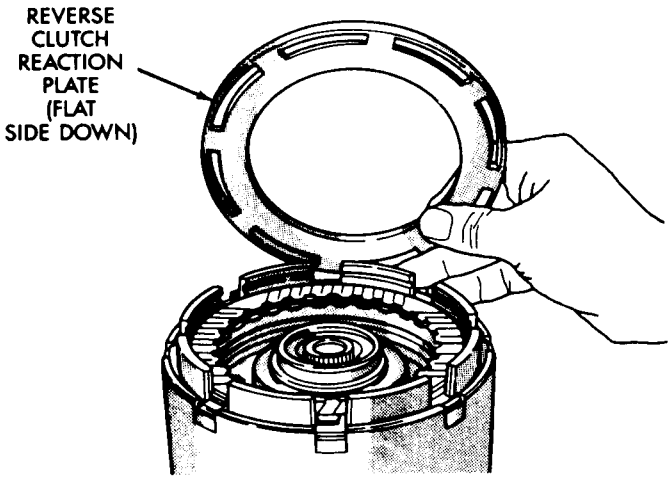

Fig. 28—Install Reaction Plate

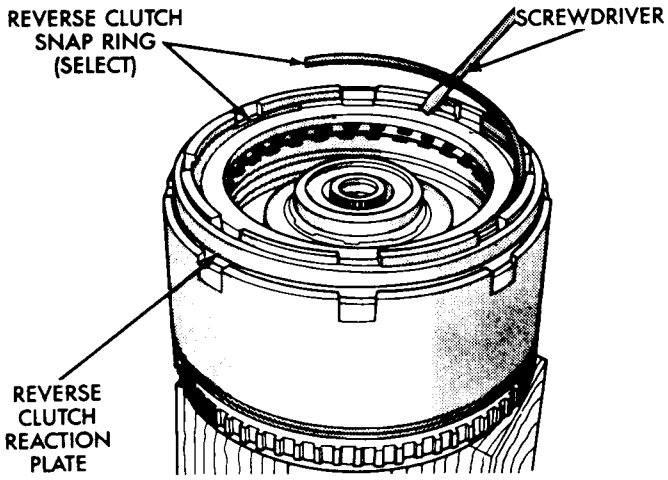

Fig. 29—Install Reverse Clutch Snap Ring

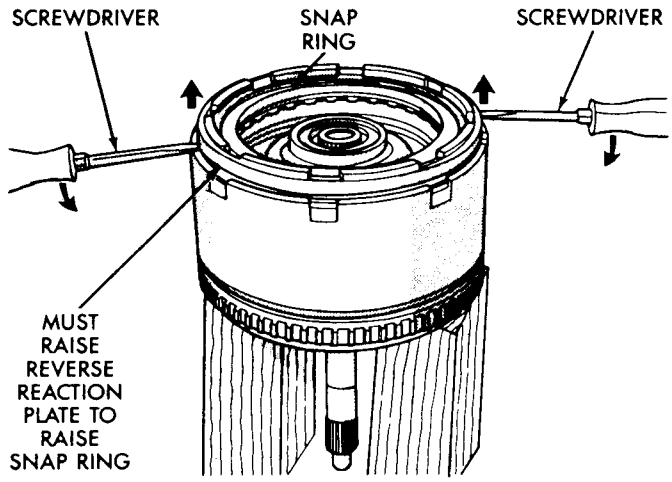

Fig. 30—Seating Snap Ring to Determine Reverse Clutch Clearance

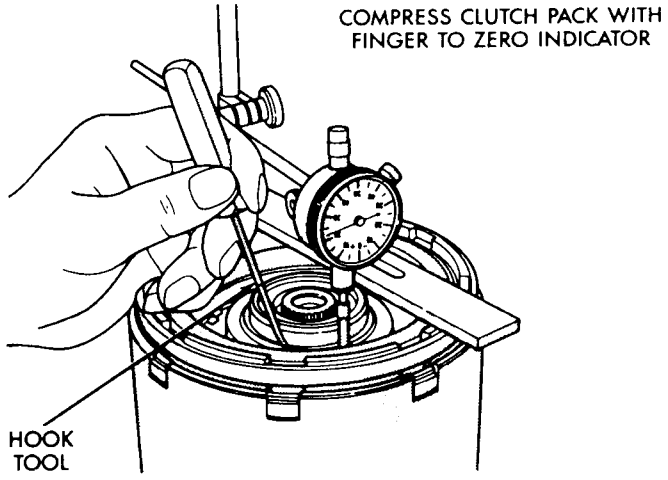

Fig. 31—Check Reverse Clutch Pack Clearance

The reverse clutch pack clearance is 0.76 to 0.99mm (.030 to .039 inch). Select the proper reverse clutch snap ring to achieve specifications:

PART NO.	THICKNESS
4377195	1.56 mm (.061 in.)
4412871	1.80 mm (.071 in.)
4412872	2.05 mm (.081 in.)
4412873	2.30 mm (.090 in.)

All clutch clearances in the input clutches retainer have been checked and approved.

To complete the assembly of the input clutches retainer, the reverse clutch and the overdrive clutch must now be removed from the retainer. **CAUTION: Do not intermix clutch parts. Keep in exact same order.**

Now proceed with the next phase of the assembly:

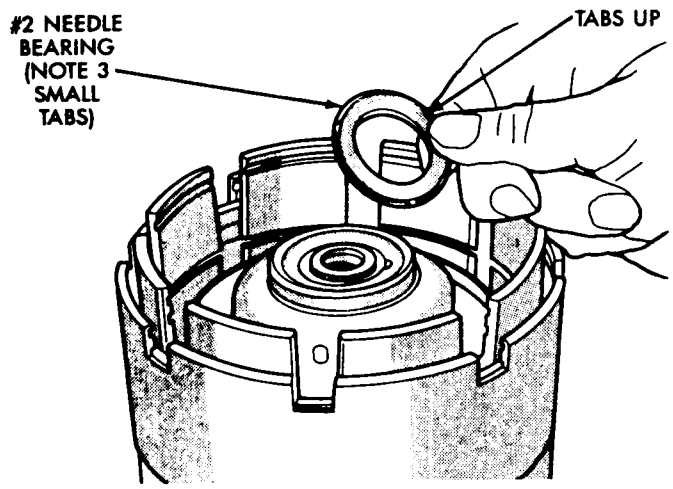

Fig. 32—Install #2 Needle Bearing

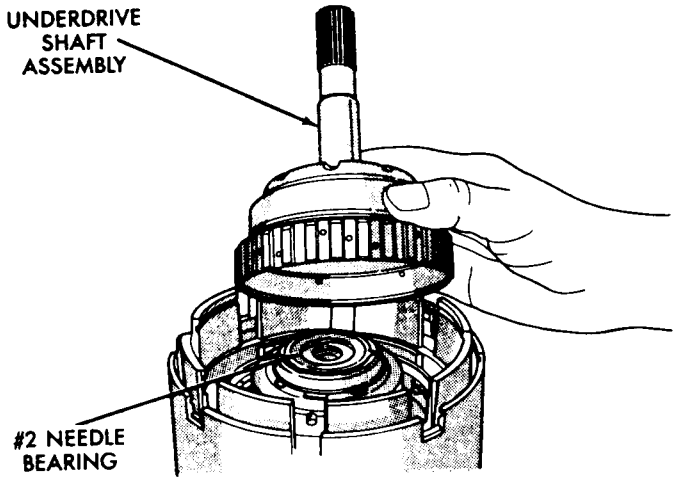

Fig. 33—Install Underdrive Shaft Assembly

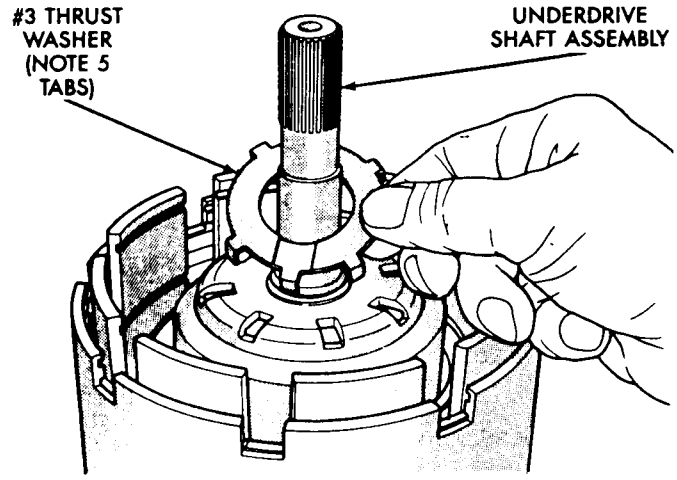

Fig. 34—Install #3 Thrust Washer

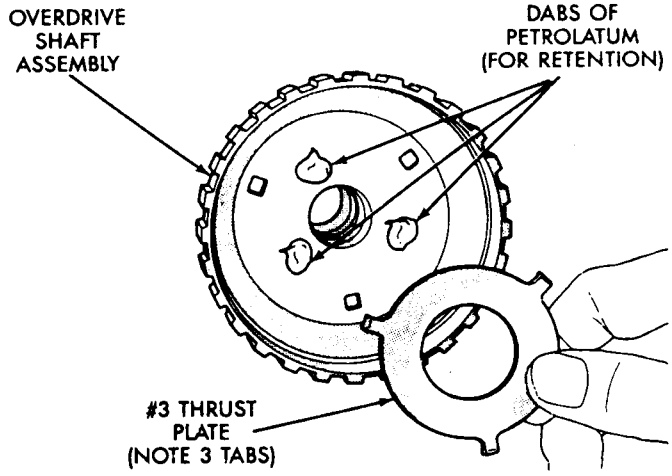

Fig. 35—Install #3 Thrust Plate

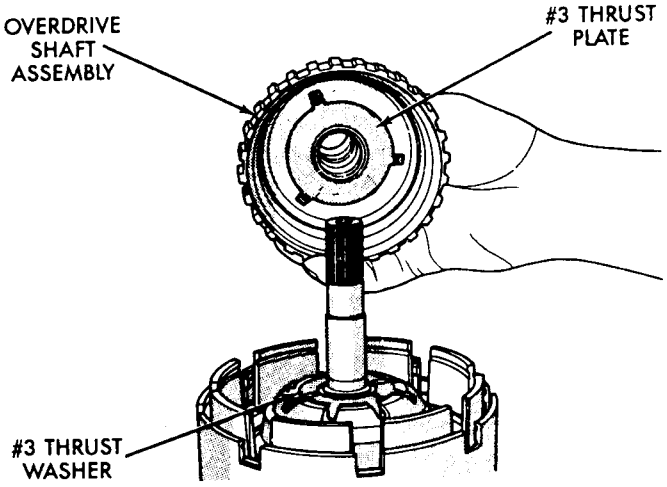

Fig. 36—Install Overdrive Shaft Assembly

Now that both shaft assemblies and thrust washers are properly installed, reinstall overdrive clutch and reverse clutch as shown in Figure 21 thru 29. **Rechecking these clutch clearances is not necessary, as they were set and approved previously.**

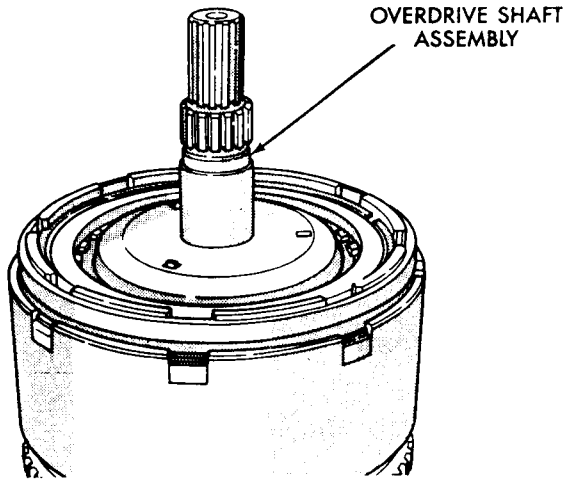

Fig. 37—Input Shaft Clutches Assembly

DIFFERENTIAL REPAIR

The transfer shaft should be removed for differential repair and bearing turning torque checking.

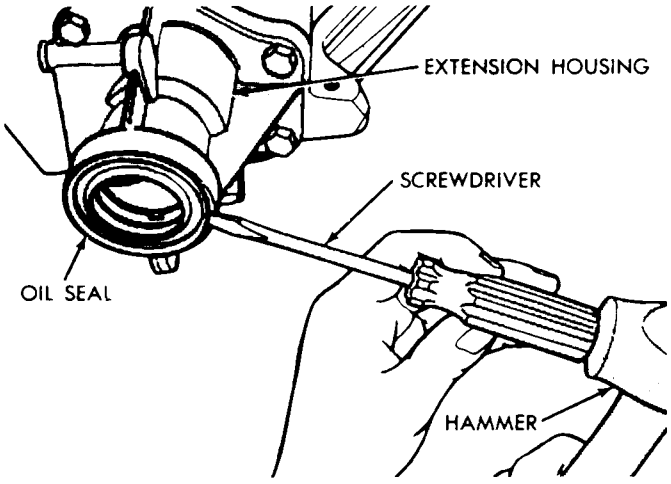

Fig. 1—Remove Extension Seal

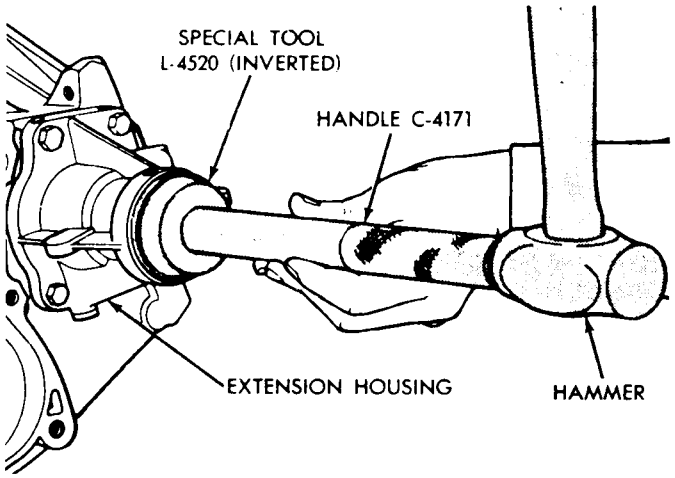

Fig. 2—Install New Seal Into Extension

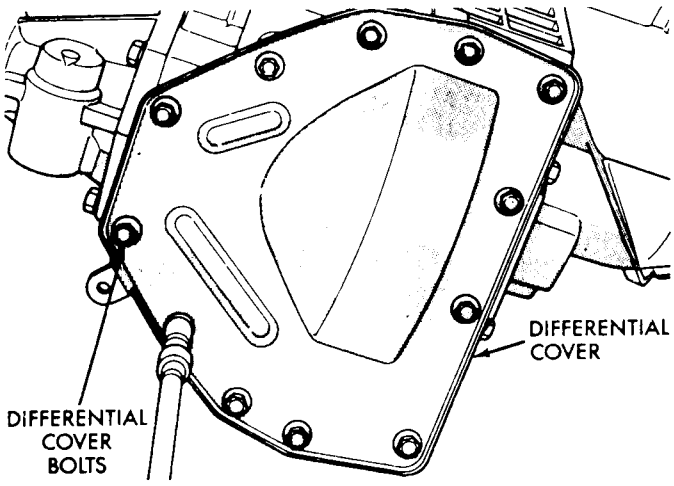

Fig. 3—Differential Cover Bolts

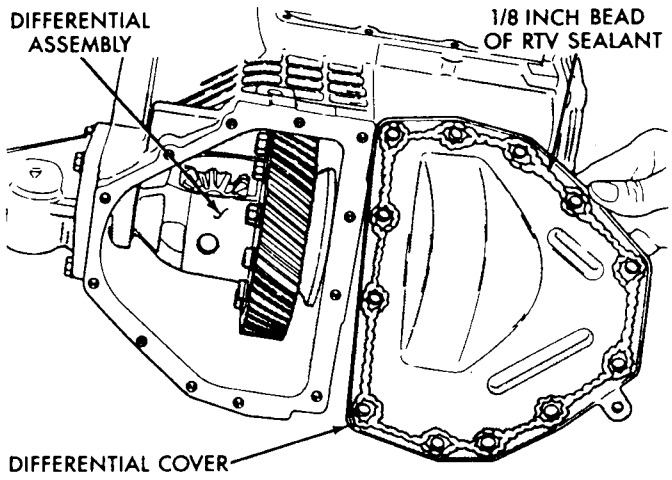

Fig. 4—Remove or Install Differential Cover

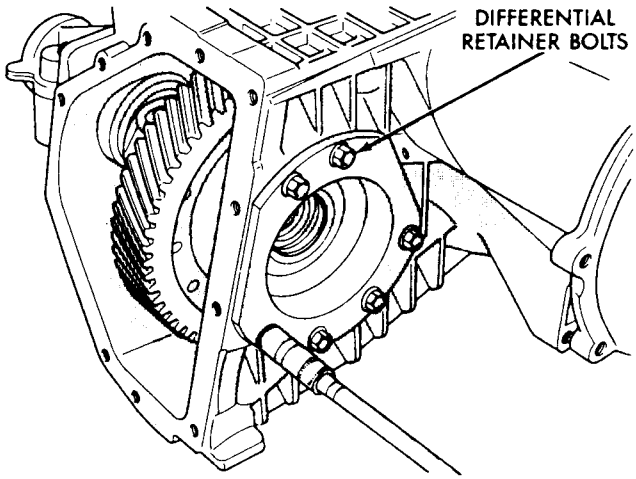

Fig. 5—Differential Retainer Bolts

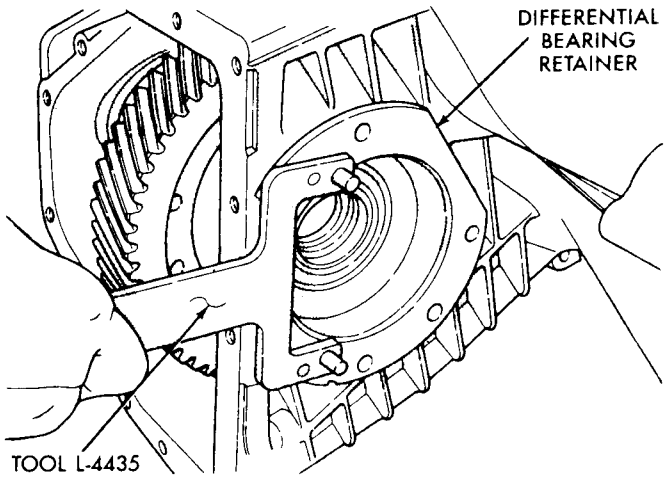

Fig. 6—Remove or Install Bearing Retainer

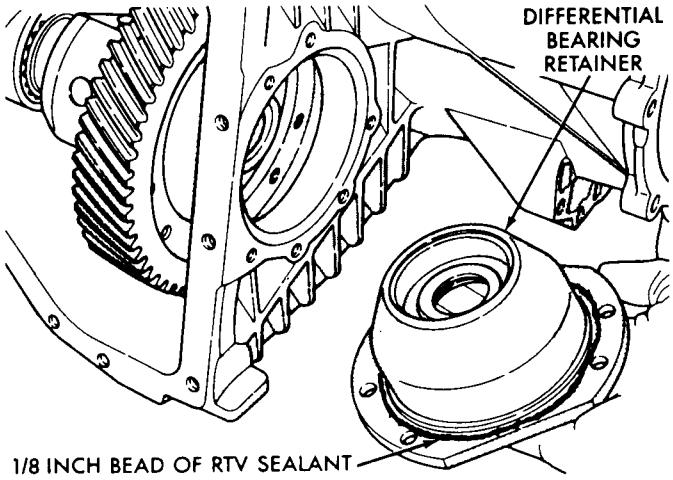

Fig. 7—Differential Bearing Retainer

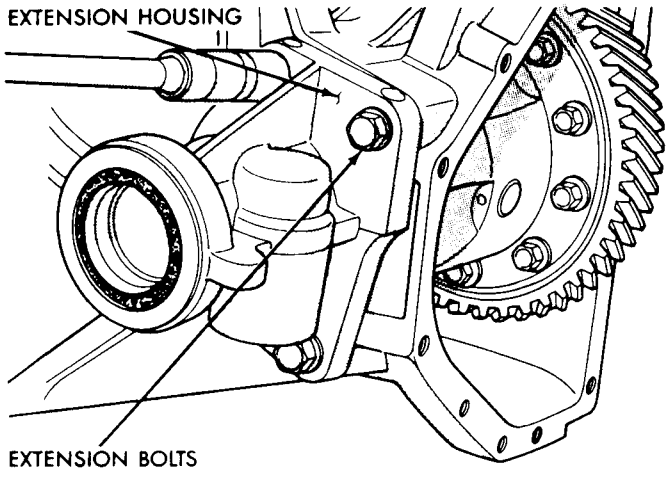

Fig. 8—Extension Bolts

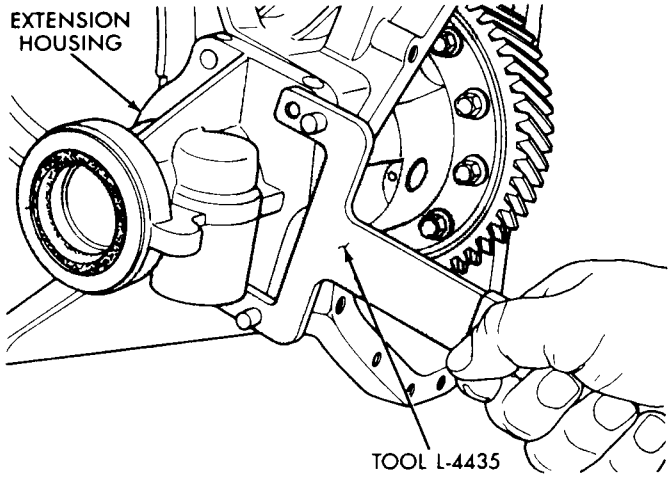

Fig. 9—Remove or Install Extension

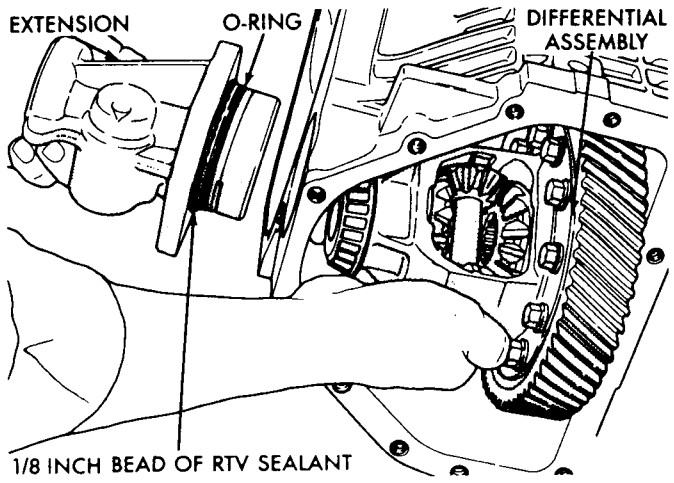

Fig. 10—Differential and Extension

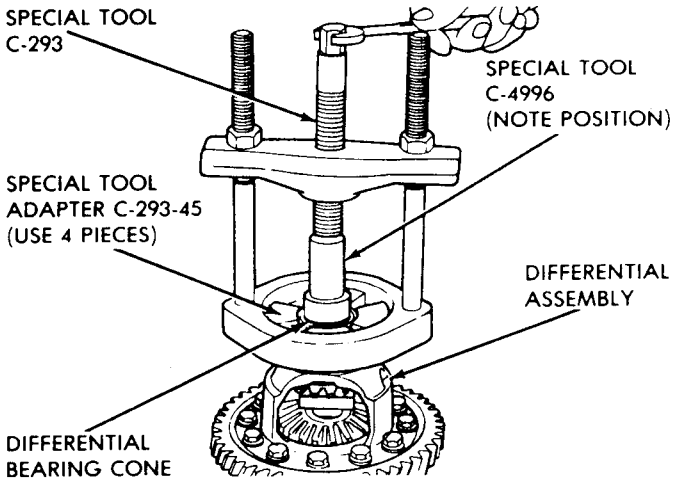

Fig. 11—Remove Differential Bearing Cone

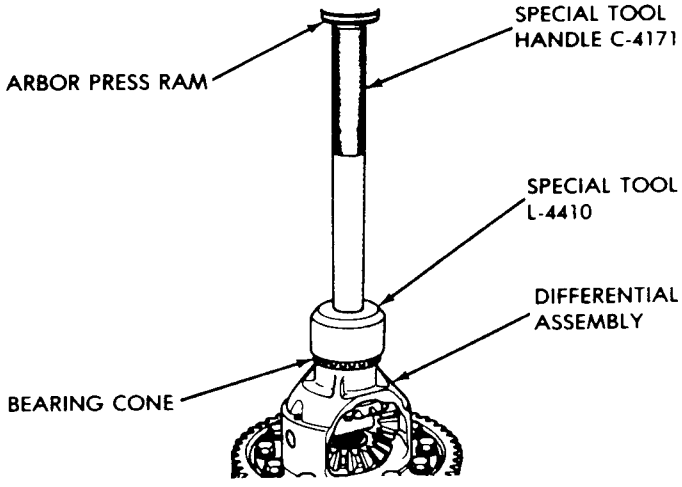

Fig. 12—Install Differential Bearing Cone

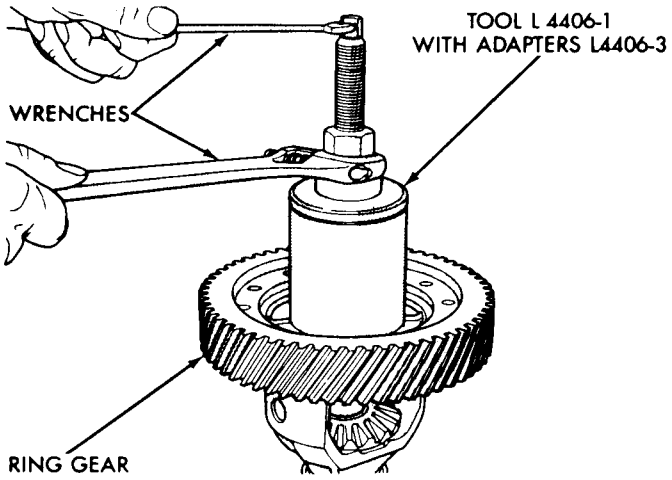

Fig. 13—Remove Differential Bearing Cone

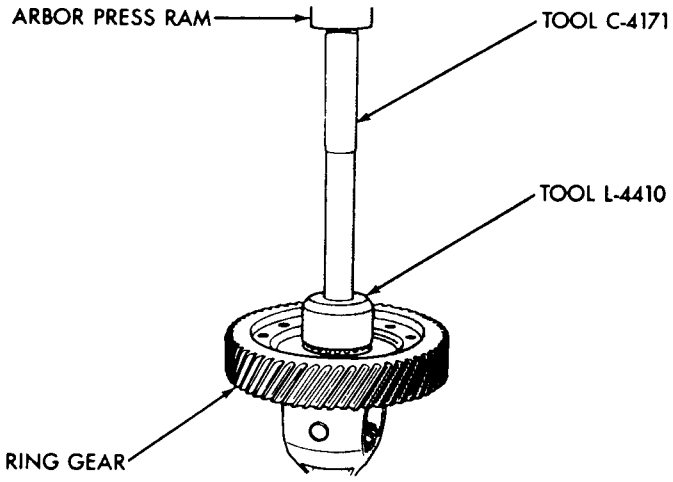

Fig. 14—Install Differential Bearing Cone

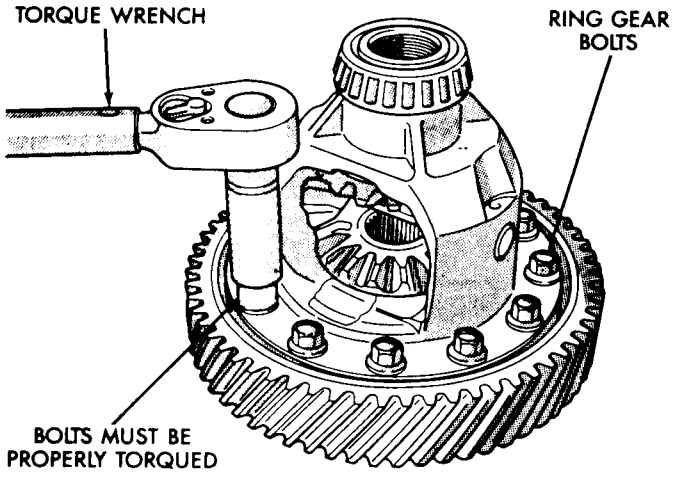

Fig. 15—Torque New Ring Gear Bolts to 95 N·m (70 Ft. Lbs.)

CAUTION: Always install NEW ring gear bolts. Bolts must be properly torqued.

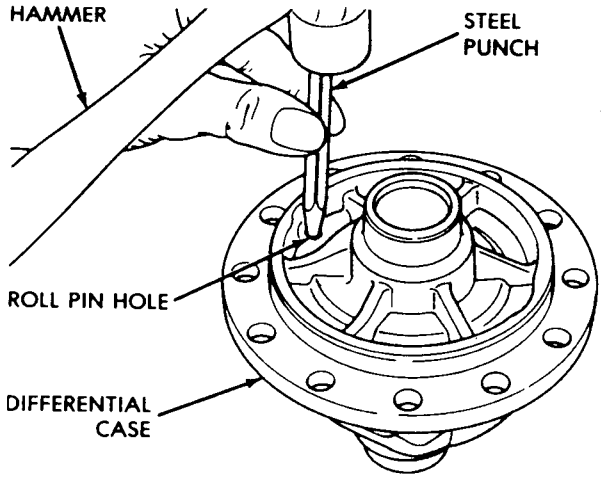

Fig. 16—Remove Pinion Shaft Roll Pin

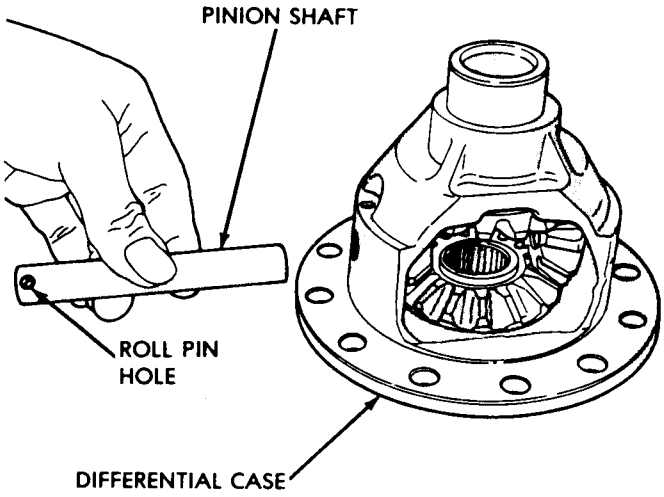

Fig. 17—Remove or Install Pinion Shaft

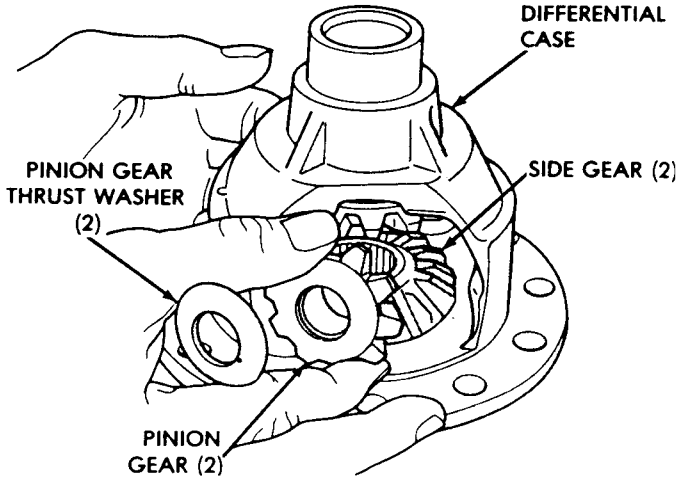

Fig. 18—Remove or Install Pinion Gears, Side Gears, and Tabbed Thrust Washers, by Rotating Pinion Gears to Opening in Differential Case

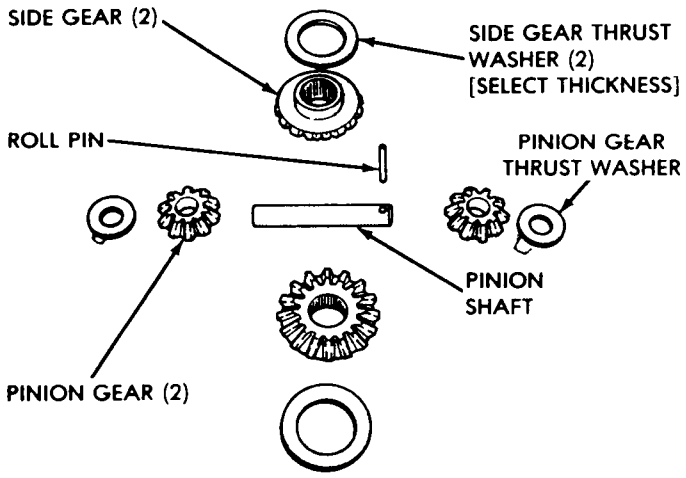

Fig. 19—Differential Gears

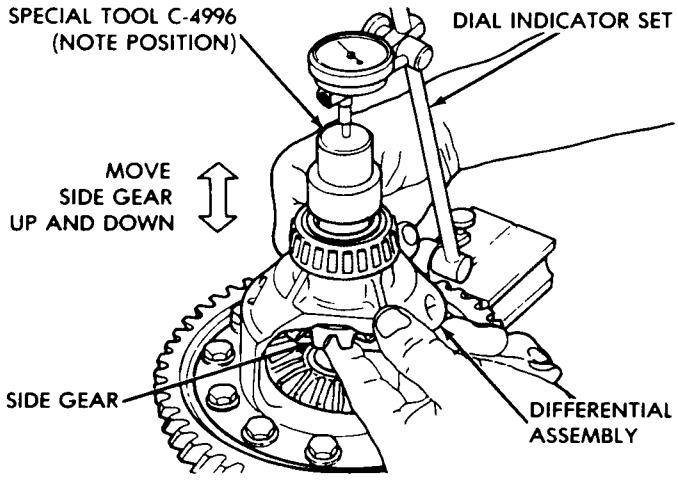

Fig. 20—Checking Side Gear End Play

CAUTION: Side gear end play must be within .001 to .013 inch.

4 select thrust washers are available: .032, .037, .042, and .047 inch.

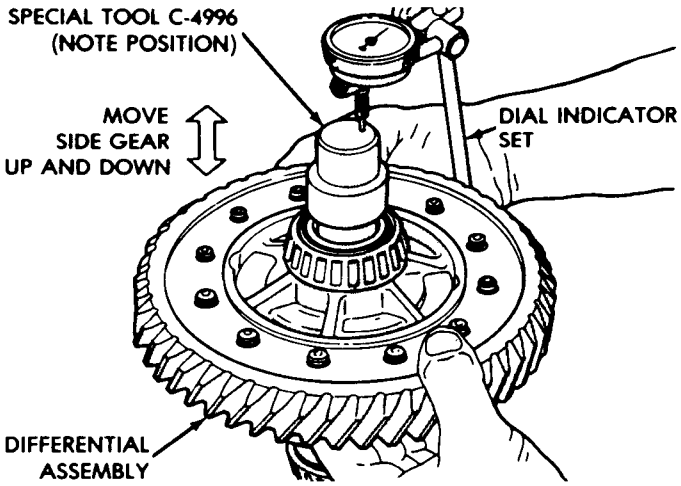

Fig. 21—Checking Side Gear End Play

CAUTION: Side gear end play must be within .001 to .013 inch.

4 select thrust washers are available: .032, .037, .042, and .047 inch.

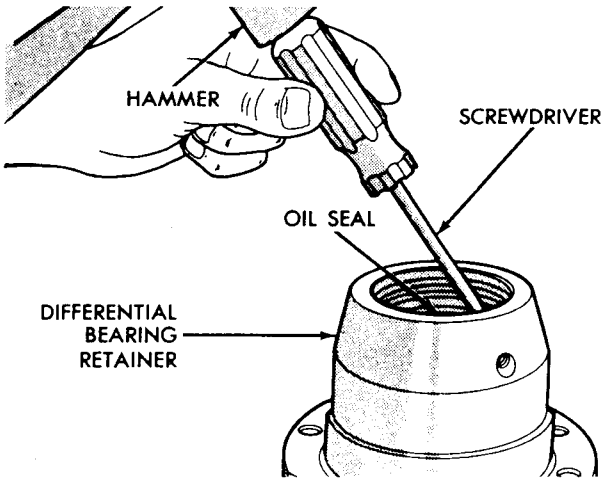

Fig. 22—Remove Oil Seal

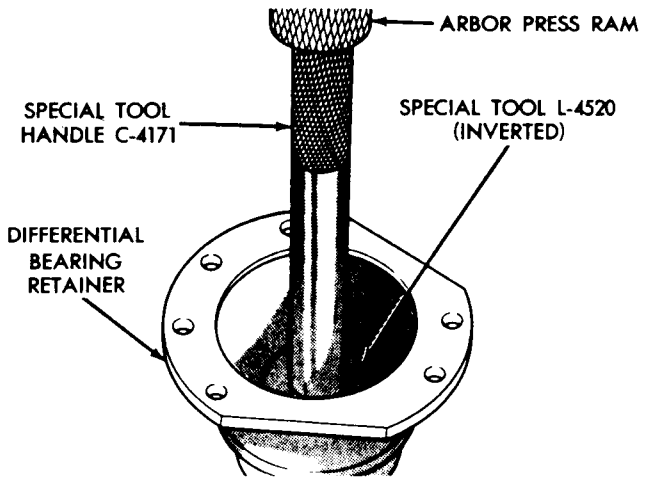

Fig. 23—Install New Oil Seal

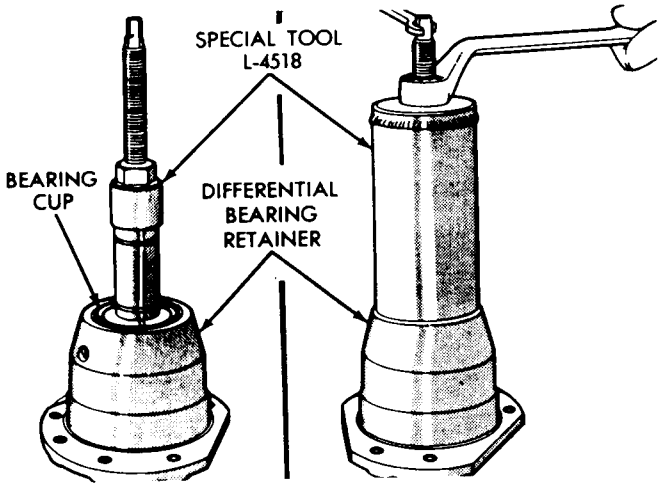

Fig. 24—Remove Bearing Cup

Determining Shim Thickness

Shim thickness need only be determined if any of the following parts are replaced:

(a) transaxle case
(b) differential carrier
(c) differential bearing retainer
(d) extension housing
(e) differential bearing cups and cones

Refer to "Bearing Adjustment Procedure" in rear of this section to determine proper shim thickness for correct bearing preload and proper bearing turning torque.

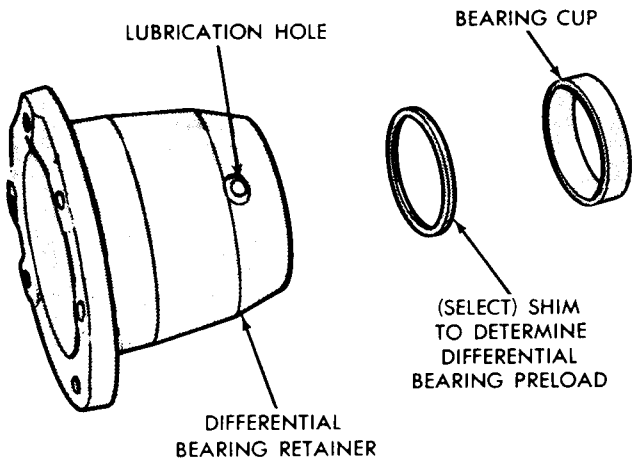

Fig. 25—Differential Bearing Retainer

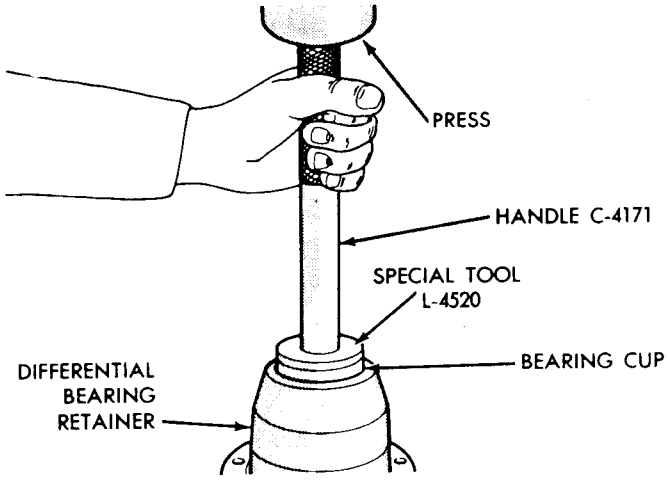

Fig. 26—Install Bearing Cup

When rebuilding, reverse the above procedure.

Remove old RTV before applying new RTV Sealant. Use RTV Sealant on retainer to seal retainer to case.

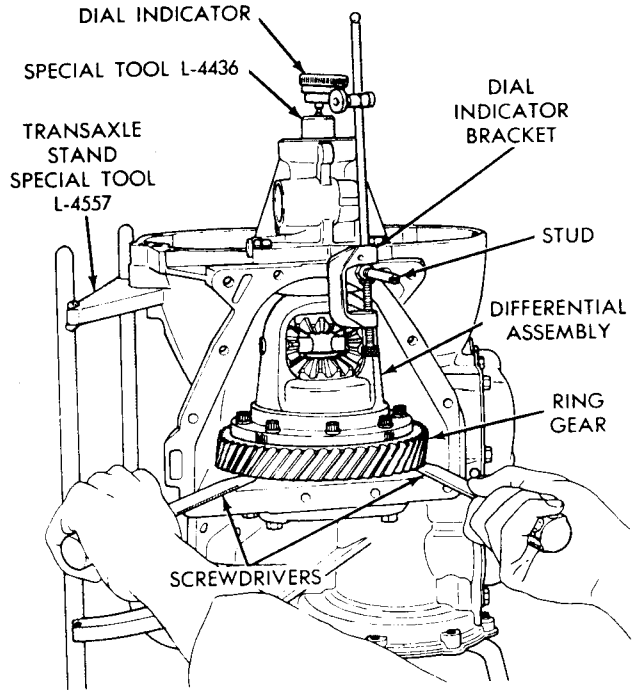

Fig. 27—Checking Differential End Play

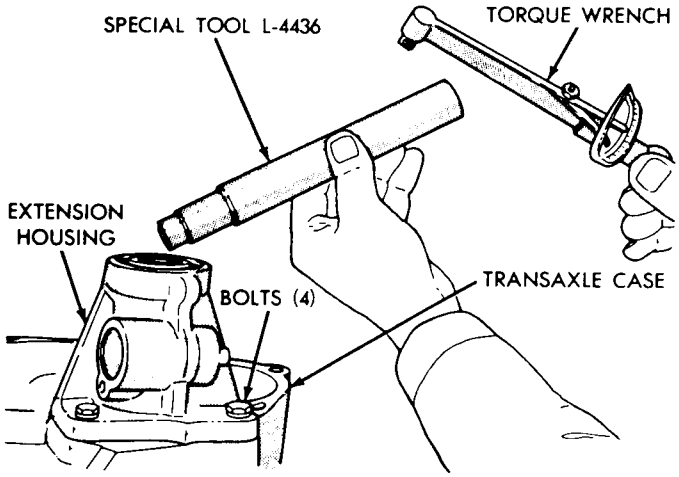

Fig. 28—Tool L-4436 and Torque Wrench

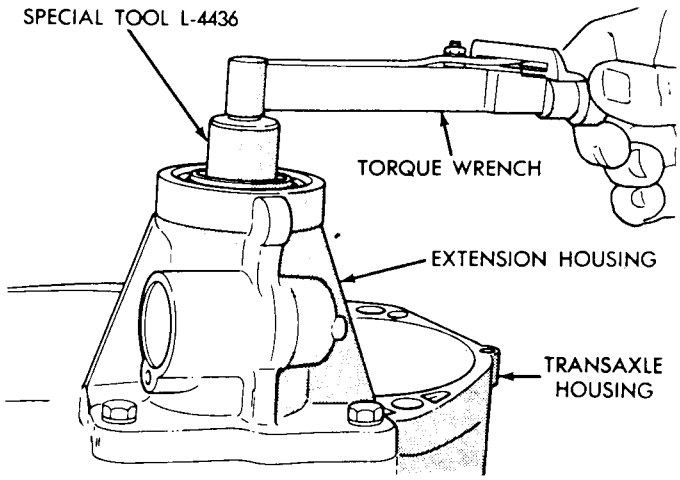

Fig. 29—Checking Differential Bearings Turning Torque

BEARING ADJUSTMENT PROCEDURES

GENERAL RULES ON SERVICING BEARINGS

(1) Take extreme care when removing and installing bearing cups and cones. **Use only an arbor press for installation,** as a hammer may not properly align the bearing cup or cone. Burrs or nicks on the bearing seat will give a false end play reading, while gauging for proper shims. Improperly seated bearing cup and cones are subject to low-mileage failure.

(2) Bearing cups and cones should be replaced if they show signs of pitting or heat distress.

If distress is seen on either the cup or bearing rollers, both cup and cone must be replaced. **Bearing end play and drag torque specifications must be maintained to avoid premature bearing failures.**

Used (original) bearing may lose up to 50% of the original drag torque after break-in. **All bearing adjustments must be made with no other component interference or gear inter-mesh, except the transfer gear bearing.**

OUTPUT GEAR BEARINGS

The output gear tapered roller bearings must have a preload of .02 to .05 millimeter **(.0008 to .002 inch).**

DIFFERENTIAL BEARING

(1) Remove the bearing cup from the differential bearing retainer using Tool L-4518, and remove the existing shim from under the cup.

(2) Install a .50 mm (.020 inch) gauging shim and reinstall the bearing cup into the retainer. Use an arbor press to install the cup. **Oil Baffle is not required when making shim selection.**

DIFFERENTIAL BEARING SHIM CHART

End Play (with .50mm gauging shim Installed)		Required Shim Combination	Total Thickness	
mm	Inch	mm	mm	Inch
.0	.0	.50	.50	.020
.05	.002	.75	.75	.030
.10	.004	.80	.80	.032
.15	.006	.85	.85	.034
.20	.008	.90	.90	.035
.25	.010	.95	.95	.037
.30	.012	1.00	1.00	.039
.35	.014	1.05	1.05	.041
.40	.016	.50 + .60	1.10	.043
.45	.018	.50 + .65	1.15	.045
.50	.020	.50 + .70	1.20	.047
.55	.022	.50 + .75	1.25	.049
.60	.024	.50 + .80	1.30	.051
.65	.026	.50 + .85	1.35	.053
.70	.027	.50 + .90	1.40	.055
.75	.029	.50 + .95	1.45	.057
.80	.031	.50 + 1.00	1.50	.059
.85	.033	.50 + 1.05	1.55	.061
.90	.035	1.00 + .60	1.60	.063
.95	.037	1.00 + .65	1.65	.065
1.00	.039	1.00 + .70	1.70	.067
1.05	.041	1.00 + .75	1.75	.069
1.10	.043	1.00 + .80	1.80	.071
1.15	.045	1.00 + .85	1.85	.073
1.20	.047	1.00 + .90	1.90	.075
1.25	.049	1.00 + .95	1.95	.077
1.30	.051	1.00 + 1.00	2.00	.079
1.35	.053	1.00 + 1.05	2.05	.081
1.40	.055	1.05 + 1.05	2.10	.083

(3) Install the bearing retainer into the case and torque bolts to 28 N·m (250 in. lbs.).

(4) Position the transaxle assembly vertically on the support stand and install Tool L-4436 into the extension.

(5) Rotate the differential at least one full revolution to ensure the tapered roller bearings are fully seated.

(6) Attach a dial indicator to the case and zero the dial indicator. Place the indicator tip on the end of Tool L-4436.

(7) Place a large screwdriver to each side of the ring gear and lift. Check the dial indicator for the amount of end play.

CAUTION: Do not damage the transaxle case and/or differential cover sealing surface.

(8) When the end play has been determined, refer to the Differential Bearing Shim Chart for the correct shim combination to obtain the proper bearing setting.

(9) Remove the differential bearing retainer. Remove the bearing cup and the .50 mm (.020 inch) gauging shim.

(10) Install the proper shim combination under the bearing cup. Make sure the oil baffle is installed properly in the bearing retainer, below the bearing shim and cup.

(11) Install the differential bearing retainer. Make sure to seal the retainer to the housing with RTV sealant and torque bolts to 28 N·m (250 in. lbs.).

(12) Using special Tool L-4436 and an inch-pound torque wrench, check the turning torque of the differential. **The turning torque should be between 5 and 18 inch-pounds.**

If the turning torque is too high, install a .05 mm (.002 inch) thinner shim. If the turning torque is too low, install a .05 mm (.002 inch) thicker shim. Repeat until 5 to 18 inch-pounds turning torque is obtained.

TRANSFER SHAFT BEARING

The transfer shaft must have end play of .05 to .10 millimeter **(.002 to .004 inch).**

INCHES TO MILLIMETERS

All values in this table are exact

inches	0.000	0.001	0.002	0.003	0.004	0.005	0.006	0.007	0.008	0.009
	millimeters									
0.000	—	0.0254	0.0508	0.0762	0.1016	0.1270	0.1524	0.1778	0.2032	0.2286
0.010	0.2540	0.2794	0.3048	0.3302	0.3556	0.3810	0.4064	0.4318	0.4572	0.4826
0.020	0.5080	0.5334	0.5588	0.5842	0.6096	0.6350	0.6604	0.6858	0.7112	0.7366
0.030	0.7620	0.7874	0.8128	0.8382	0.8636	0.8890	0.9144	0.9398	0.9652	0.9906
0.040	1.0160	1.0414	1.0668	1.0922	1.1176	1.1430	1.1684	1.1938	1.2192	1.2446
0.050	1.2700	1.2954	1.3208	1.3462	1.3716	1.3970	1.4224	1.4478	1.4732	1.4986
0.060	1.5240	1.5494	1.5748	1.6002	1.6256	1.6510	1.6764	1.7018	1.7272	1.7526
0.070	1.7780	1.8034	1.8288	1.8542	1.8796	1.9050	1.9304	1.9558	1.9812	2.0066
0.080	2.0320	2.0574	2.0828	2.1082	2.1336	2.1590	2.1844	2.2098	2.2352	2.2606
0.090	2.2860	2.3114	2.3368	2.3622	2.3876	2.4130	2.4384	2.4638	2.4892	2.5146
0.100	2.5400	2.5654	2.5908	2.6162	2.6416	2.6670	2.6924	2.7178	2.7432	2.7686
0.110	2.7940	2.8194	2.8448	2.8702	2.8956	2.9210	2.9464	2.9718	2.9972	3.0226
0.120	3.0480	3.0734	3.0988	3.1242	3.1496	3.1750	3.2004	3.2258	3.2512	3.2766
0.130	3.3020	3.3274	3.3528	3.3782	3.4036	3.4290	3.4544	3.4798	3.5052	3.5306
0.140	3.5560	3.5814	3.6068	3.6322	3.6576	3.6830	3.7084	3.7338	3.7592	3.7846
0.150	3.8100	3.8354	3.8608	3.8862	3.9116	3.9370	3.9624	3.9878	4.0132	4.0386
0.160	4.0640	4.0894	4.1148	4.1402	4.1656	4.1910	4.2164	4.2418	4.2672	4.2926
0.170	4.3180	4.3434	4.3688	4.3942	4.4196	4.4450	4.4704	4.4958	4.5212	4.5466
0.180	4.5720	4.5974	4.6228	4.6482	4.6736	4.6990	4.7244	4.7498	4.7752	4.8006
0.190	4.8260	4.8514	4.8768	4.9022	4.9276	4.9530	4.9784	5.0038	5.0292	5.0546
0.200	5.0800	5.1054	5.1308	5.1562	5.1816	5.2070	5.2324	5.2578	5.2832	5.3086
0.210	5.3340	5.3594	5.3848	5.4102	5.4356	5.4610	5.4864	5.5118	5.5372	5.5626
0.220	5.5880	5.6134	5.6388	5.6642	5.6896	5.7150	5.7404	5.7658	5.7912	5.8166
0.230	5.8420	5.8674	5.8928	5.9182	5.9436	5.9690	5.9944	6.0198	6.0452	6.0706
0.240	6.0960	6.1214	6.1468	6.1722	6.1976	6.2230	6.2484	6.2738	6.2992	6.3246
0.250	6.3500	6.3754	6.4008	6.4262	6.4516	6.4770	6.5024	6.5278	6.5532	6.5786
0.260	6.6040	6.6294	6.6548	6.6802	6.7056	6.7310	6.7564	6.7818	6.8072	6.8326
0.270	6.8580	6.8834	6.9088	6.9342	6.9596	6.9850	7.0104	7.0358	7.0612	7.0866
0.280	7.1120	7.1374	7.1628	7.1882	7.2136	7.2390	7.2644	7.2989	7.3152	7.3406
0.290	7.3660	7.3914	7.4168	7.4422	7.4676	7.4930	7.5184	7.5438	7.5692	7.5946
0.300	7.6200	7.6454	7.6708	7.6962	7.7216	7.7470	7.7724	7.7978	7.8232	7.8486
0.310	7.8740	7.8994	7.9248	7.9502	7.9756	8.0010	8.0264	8.0518	8.0772	8.1026
0.320	8.1280	8.1534	8.1788	8.2042	8.2296	8.2550	8.2804	8.3058	8.3312	8.3566
0.330	8.3820	8.4074	8.4328	8.4582	8.4836	8.5090	8.5344	8.5598	8.5852	8.6106
0.340	8.6360	8.6614	8.6868	8.7122	8.7376	8.7630	8.7884	8.8138	8.8392	8.8646
0.350	8.8900	8.9154	8.9408	8.9662	8.9916	9.0170	9.0424	9.0678	9.0932	9.1186
0.360	9.1440	9.1694	9.1948	9.2202	9.2456	9.2710	9.2964	9.3218	9.3472	9.3726
0.370	9.3980	9.4234	9.4488	9.4742	9.4996	9.5250	9.5504	9.5758	9.6012	9.6266
0.380	9.6520	9.6774	9.7028	9.7282	9.7536	9.7790	9.8044	9.8298	9.8552	9.8806
0.390	9.9060	9.9314	9.9568	9.9822	10.0076	10.0330	10.0584	10.0838	10.1092	10.1346
0.400	10.1600	10.1854	10.2108	10.2362	10.2616	10.2870	10.3124	10.3378	10.3632	10.3886
0.410	10.4140	10.4394	10.4648	10.4902	10.5156	10.5410	10.5664	10.5918	10.6172	10.6426
0.420	10.6680	10.6934	10.7188	10.7442	10.7696	10.7950	10.8204	10.8458	10.8712	10.8966
0.430	10.9220	10.9474	10.9728	10.9982	11.0236	11.0490	11.0744	11.0998	11.1252	11.1506
0.440	11.1760	11.2014	11.2268	11.2522	11.2776	11.3030	11.3284	11.3538	11.3792	11.4046
0.450	11.4300	11.4554	11.4808	11.5062	11.5316	11.5570	11.5824	11.6078	11.6332	11.6586
0.460	11.6840	11.7094	11.7348	11.7602	11.7856	11.8110	11.8364	11.8618	11.8872	11.9126
0.470	11.9380	11.9634	11.9888	12.0142	12.0396	12.0650	12.0904	12.1158	12,1412	12.1666
0.480	12.1920	12.2174	12.2428	12.2682	12.2936	12.3190	12.3444	12.3698	12.3952	12.4206
0.490	12.4460	12.4714	12.4968	12.5222	12.5476	12.5730	12.5984	12.6238	12.6492	12.6746
inches	0.000	0.001	0.002	0.003	0.004	0.005	0.006	0.007	0.008	0.009

SPECIFICATIONS
A-413 3-SPEED AUTOMATIC TRANSAXLE

	Metric Measure	U.S. Measure
Type	Automatic Three Speed With Torque Converter and Integral Differential	
Torque Converter Diameter	241 millimeters	9.48 inches
Oil Capacity—Transaxle and Torque Converter:		
except fleet	8.4 Liters	8.9 qts.
fleet only	8.7 Liters	9.2 qts.
Use MOPAR ATF Automatic Transmission Fluid Type 7176 (or DEXRON II)		
Cooling Method	Water-Heat Exchanger and/or oil-to-air heat exchanger	
Lubrication	Pump (Internal-External Gear Type)	

Gear Ratios:

Transmission Portion: First	2.69
Second	1.55
Third	1.00
Reverse	2.10

Pump Clearances:	(Millimeter)	(Inch)
Outer Gear to Pocket	.045-.141	.0018-.0056
Outer Gear Side Clearance	.020-.046	.0008-.0018
Inner Gear Side Clearance	.020-.046	.0008-.0018

End Play:	(Millimeter)	(Inch)
Input Shaft	.19-1.50	.008-.060
Front Clutch Retainer	.76-2.69	.030-.106
Front Carrier	.89-1.45	.007-.057
Front Annulus Gear	.09-0.50	.0035-.020
Planet Pinion	.15-0.59	.006-.023
Reverse Drum	.76-3.36	.030-.132

Clutch Clearance and Selective Snap Rings:		(Millimeter)	(Inch)
Front Clutch (Non-Adjustable) Measured from Reaction Plate to "Farthest" Wave	3 Disc....	2.22-3.37	.087-.133
	4 Disc....	2.29-3.71	.090-.146
Rear Clutch (3 and 4 Disc) Adjustable	3 Disc....	.67-1.10	.026-.043
	4 Disc....	.67-1.10	.026-.043
Selective Snap Rings (5)		1.22-1.27	.048-.050
		1.52-1.57	.060-.062
		1.73-1.78	.068-.070
		1.88-1.93	.074-.076
		2.21-2.26	.087-.089

Band Adjustment:

Kickdown, Backed off from 8 N·m (72 in. lbs.)	2-1/2 Turns
Low-Reverse	3-1/2 Turns backed off from 5 N·m (41 in. lbs.)

Thrust Washers:		(Millimeter)	(Inch)
Reaction Shaft Support (Phenolic)	No. 1	1.55-1.60	.061-.063
Rear Clutch Retainer (Phenolic)	No. 2	1.55-1.60	.061-.063
Output Shaft, Steel Backed Bronze (Select)	No. 3	1.98-2.03	.077-.080
		2.15-2.22	.085-.087
		2.34-2.41	.092-.095
Front Annulus, Steel Backed Bronze	No. 4	2.95-3.05	.116-.120
Front Carrier, Steel Backed Bronze	Nos. 5, 6	1.22-1.28	.048-.050
Sun Gear (Front)	No. 7	.85-0.91	.033-.036
Sun Gear (Rear)	No. 8	.85-0.91	.033-.036
Rear Carrier, Steel Backed Bronze	Nos. 9, 10	1.22-1.28	.048-.050
Rev. Drum, Phenolic	No. 11	1.55-1.60	.061-.063

Tapered Roller Bearing Settings:	(Millimeter)	(Inch)
Output Shaft	.0-.07 Preload	.0-.0028 Preload
Transfer Shaft	.05-.25 End Play	.002-.010 End Play
Differential	.15-.29 Preload	.006-.012 Preload

SPECIFICATIONS
A-604 4-SPEED AUTOMATIC TRANSAXLE

Type	Fully-adaptive, electronically-controlled, four-speed automatic with torque converter and integral differential
Torque Converter Diameter	241 millimeters (9.48 inches)
Oil Capacity—Transaxle and Torque Converter	8.6 Liters (18.25 pints)
Oil Type	MOPAR ATF Type 7176 (or DEXRON II)
Cooling Method	Water heat exchanger and/or air-to-oil heat exchanger
Lubrication	Pump (internal-external gear type)
Gear Ratios:	
Transmission portion:	
First	2.84
Second	1.57
Direct	1.00
Overdrive	.69
Reverse	2.21
Overall Top Gear Ratio:	
(in overdrive)	2.36
Pump Clearances:	(same as A-413 automatic transaxle)

Tapered Roller Bearing Settings:	**(Millimeter)**	**(Inch)**
Output Gear	.02-.05 Preload	.0008-.002 Preload
Transfer Shaft	.05-.10 End Play	.002-.004 End play
Differential	.15-.29 Preload	.006-.012 Preload

SPEEDOMETER PINIONS (MANUAL and AUTOMATIC)

The chart below applies to **all front-wheel-drive vehicles** equipped with **Manual or Automatic Transaxles.**

Tire Size and Construction	**Pinion Teeth and Color**
P185 75 R14	19 Yellow
P195 75 R14	19 Yellow
P205 70 R14	19 Yellow
P205 60 R15	19 Yellow
P195 70 R14	19 Yellow
All other original equipment tires	20 Blue

A-525/A-520/A-555 MANUAL TRANSAXLE FLUID FILL

Fill All Manual Transaxles with SAE 5W-30 Engine oil to bottom of fill hole in end cover:

Transaxle	**Metric Measure**	**U.S. Measure**
A-525	2.1 Liters	2.3 Quarts
A-520/A-555	2.3 Liters	2.5 Quarts

TIGHTENING REFERENCE

Item	Qty.	Thread Size	Torque		
			Newton-meters	Inch-Pounds	Foot-Pounds
A-413 Automatic Transaxle:					
Bolt—Bell Housing Cover	3	9.8-M6-1-10	12	105	—
Bolt—Flex Plate to Crank	8	M10×1.5×18	95	—	70
Bolt—Flex Plate to Torque Converter	4	10.9-M10×1.5×13.2	74	—	55
Screw Assy. Transaxle to Cyl. Block	3	9.8A-M12-1.75-65	95	—	70
Screw Assy. Lower Bell Housing Cover	3	9.8-M6-1-10	12	105	—
Screw Assy. Manual Control Lever	1	9.8A-M6-1-35	12	105	—
Screw Assy. Speedometer to Extension	1	9.8A-M6-1-14	7	60	—
Connector, Cooler Hose to Radiator	2	1/8-27 NPTF	12	110	—
Bolt—Starter to Transaxle Bell Housing	3	M10-1.5-30	54	—	40
Bolt—Throttle Cable to Transaxle Case	1	M6-1.0-14	12	105	—
Bolt—Throttle Lever to Transaxle Shaft	1	M6-1-25	12	105	—
Bolt—Manual Cable to Transaxle Case	1	M8-1.75-30	28	250	—
Bolt—Front Motor Mount	2	M10	54	—	40
Bolt—Left Motor Mount	3	M10-1.5-25	54	—	40
Dress Up:					
Connector Assembly, Cooler Line	2	M12-1.75-122	28	250	—
Plug, Pressure Check	7	1/16-27NPTF	5	45	—
Switch, Neutral Safety	1	3/4-16UNF	34	—	25
Differential Area:					
Ring Gear Screw	12	12.9-M10-1.5-25	95	—	70
Bolt, Extension to Case	4	9.8-M8-1.25-28	28	250	—
Bolt, Differential Bearing Retainer to Case	6	9.8-M8-1.25-28	28	250	—
Screw Assy. Differential Cover to Case	10	9.8-M8-1.25-16	19	165	—
Transfer & Output Shaft Areas:					
Nut, Output Shaft	1	M20-1.5	271	—	200
Nut, Transfer Shaft	1	M20-1.5	271	—	200
Bolt, Gov to Support	2	9.8-M5-0.8-20	7	60	—
Bolt, Gov to Support	1	9.8-M5-0.8-30	7	60	—
Screw Assy., Governor Counterweight	1	M8-1.25-35	28	250	—
Screw Assy., Rear Cover to Case	10	9.8-M8-1.25-16	19	165	—
Plug, Reverse Band Shaft	1	1/4-18-NPTF	7	60	—
Pump & Kickdown Band Areas:					
Bolt, Reaction Shaft Assembly	6	9.8-M8-1.25-19	28	250	—
Bolt Assy., Pump to Case	7	10.9-M8-1.25-25	31	275	—
Nut, Kickdown Band Adjustment Lock	1	M12-1.75	47	—	35
Valve Body & Sprag Areas:					
Bolt, Sprag Retainer to Transfer Case	2	9.8-M8-1.25-23	28	250	—
Screw Assy., Valve Body	16	9.8A-M5-0.8-11	5	40	—
Screw Assy., Transfer Plate	16	9.8A-M5-0.8-25	5	40	—
Screw Assy., Filter	2	9.8A-M5-0.8-30	5	40	—
Screw, Transfer Plate to Case	7	9.8-M6-1-30	12	105	—
Screw Assy., Oil Pan to Case	14	9.8-M8-1.25-16	19	165	—
Nut, Reverse Band Adjusting Lock	1	M8-1.25	14	120	—

TIGHTENING REFERENCE

Item	Thread Size	Torque		
		Newton-meters	Inch-Pounds	Foot-Pounds
A604 Electronic Automatic Transaxle:				
Cooler Line Fittings	1/8 × 27 NPT	12	110	—
Differential Cover	M8 × 1.25	19	165	—
Differential Ring Gear	M10 × 1.0 × 25	95	—	70
Differential Bearing Retainer	M8 × 1.25 × 23	28	—	21
Rear End Cover	M8 × 1.25	19	—	14
Extension Housing	M8 × 1.25 × 33	28	—	21
Input Speed Sensor	M22 × 1.5	27	—	20
L/R Clutch Retainer	M5 × 0.8	5	40	—
Neutral Safety Switch	3/4 IN. × 16	34	—	25
Oil Pan to Case	M8 × 1.25	19	—	14
Output Gear Bolt (1.5 inch hex)	M18 × 1.75	271	—	200
Output Speed Sensor	M24 × 2	27	—	20
Pressure Taps	1/16 – 27 NPTF	5	45	—
PRNDL Switch	M22 × 2.5	34	—	25
Pump to Case	M8 × 1.25	22	—	23
Reaction Shaft to Pump	M8 × 1.25	22	—	23
Solenoid Assy. to Case	M6 × 1.0 × 93.5	12	105	—
Transfer Plate to Case	M6 × 1.0	12	105	—
Transfer Gear Nut (1.25 inch hex)	M22 × 1.5	271	—	200
Valve Body & Transfer Plate	M5 × 0.8	5	40	—
Vent Assembly	1/8 PIPE	12	110	—
8-Way Solenoid Connector	M6 × 1.0	4	38	—
60-Way EATX Connector	M6 × 1.0	4	38	—

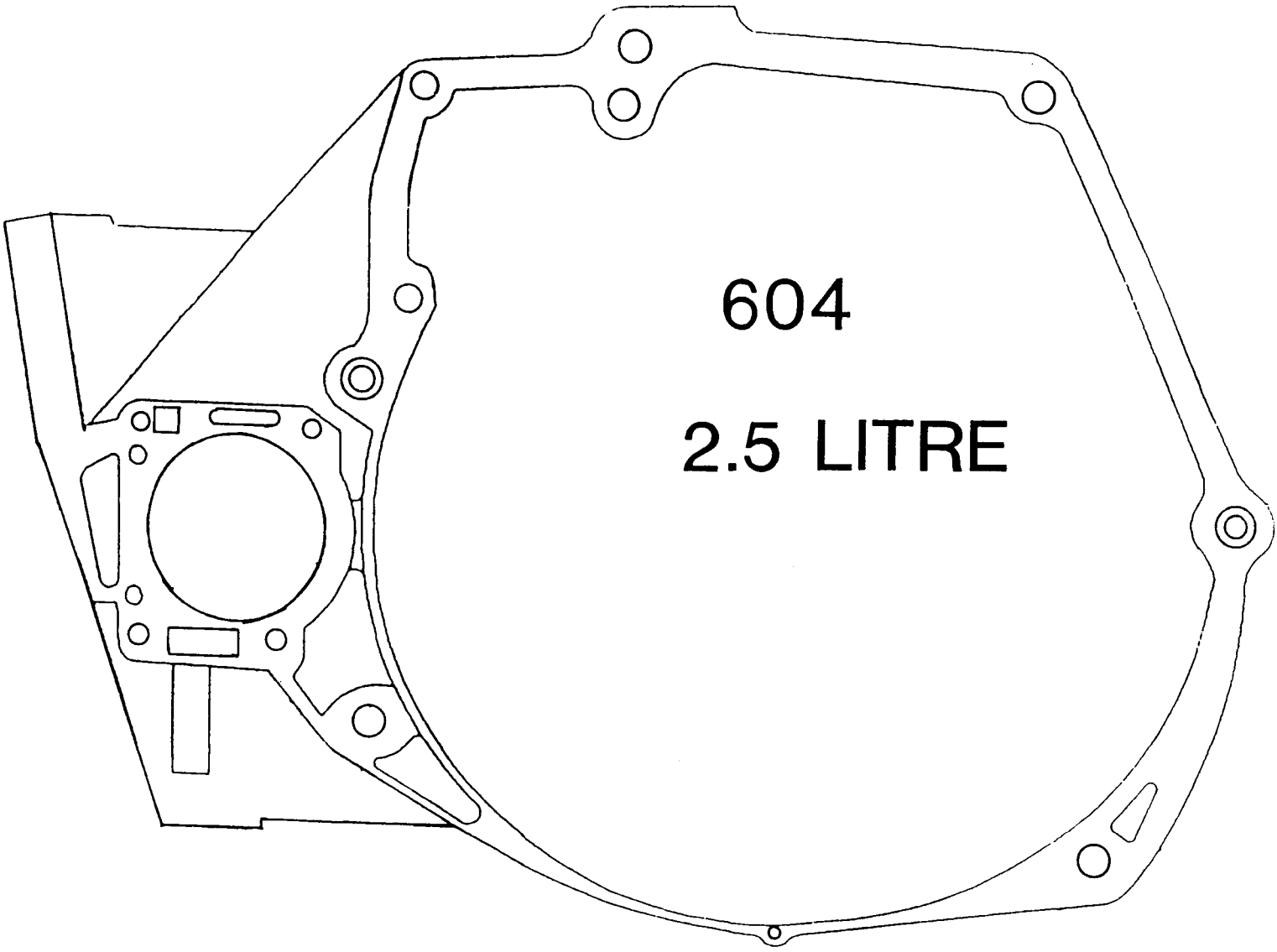

604

2.5 LITRE

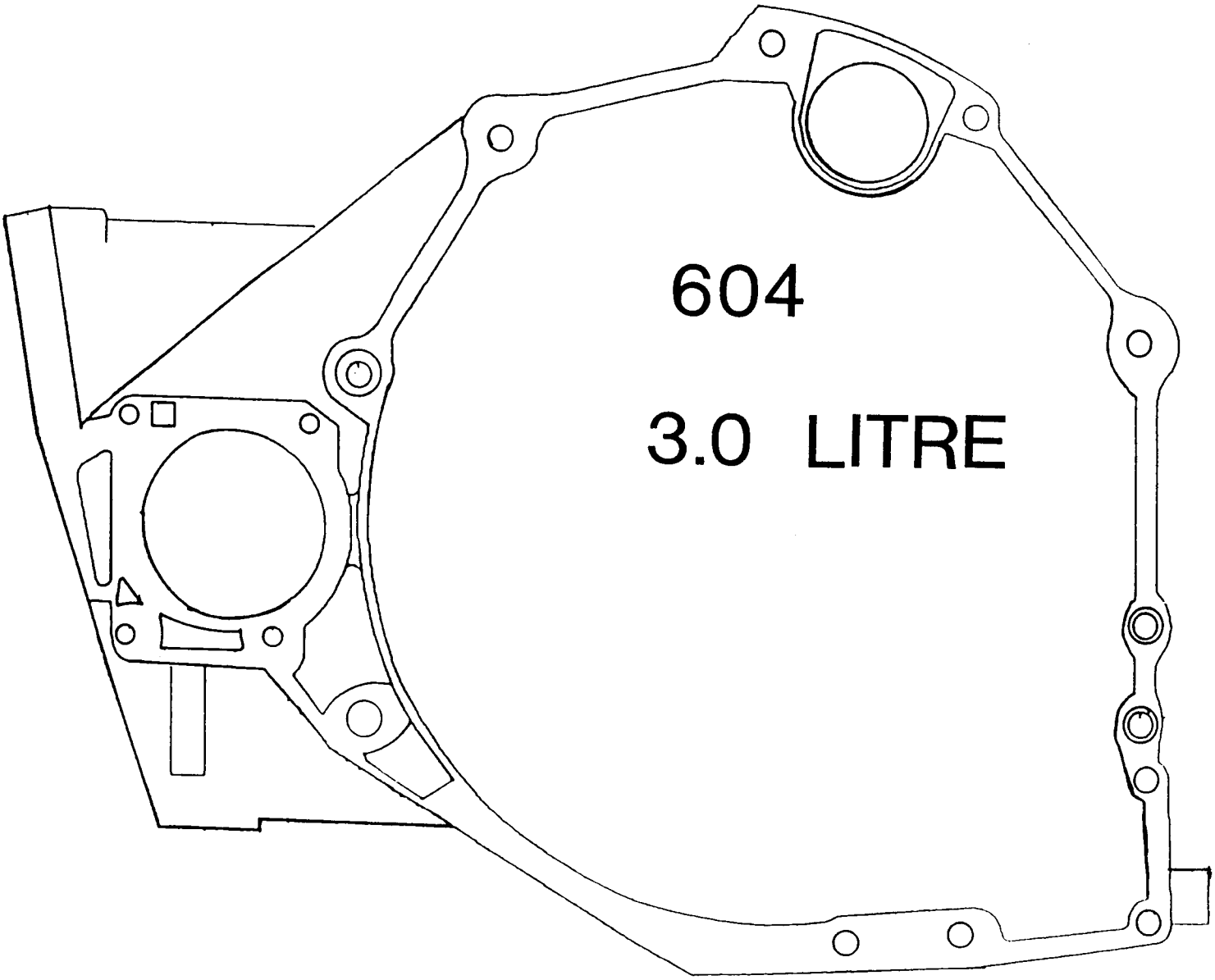
604
3.0 LITRE

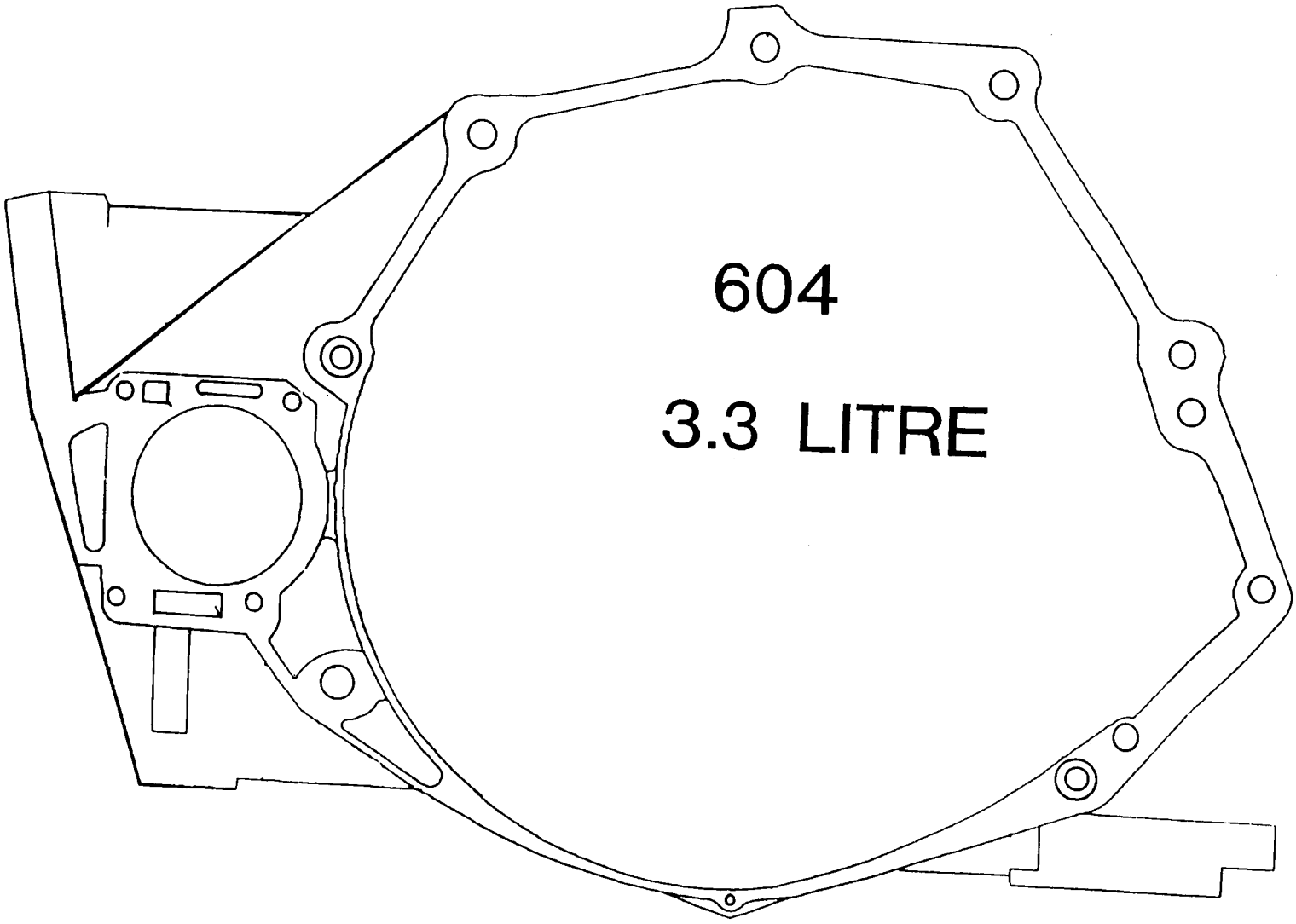
604
3.3 LITRE

TORQUEFLITE A604
UPDATED REPAIR PACKAGE

This bulletin applies to all Dynasty, New Yorker, Landau, Ram Van, Caravan, and Voyager vehicles.

There is now available from OEM a new repair package, part nimber 4549248, that includes a new 4 ring front pump reaction shaft (See Figure 1), and a new input clutch hub with shallower "O" ring grooves to increase the compression of the "O" rings (See Figure 3). The new 4 ring front pump reaction shaft (Figure 1) provides better sealing for the overdrive clutch, and the new input clutch hub with shallower "O" ring grooves (Figure 3) provides better sealing for both the underdrive clutch and the reverse clutch. Both of these updated parts are highly recommended to provide better durability for the A604 transaxle.

There has also been a modification to the input clutch retainer as shown in Figure 2. The "Lip" can be machined off of the old style input clutch retainer, or it must be replaced with part number 4431609. Refer to Figure 2.

The new repair package also includes a new valve body spacer plate. Remove and "Discard" the old spacer plate, as the new spacer plate has a larger overdrive clutch feed orifice to provide increased oil flow to the overdrive clutch circuit.

If the transmission controller part number is 5234623, or 5234649, replace it with part number 5234678 (Or Subsequent) transmission controller.

During reassembly of the transaxle, select a washer to set input shaft end play to the "Preferred" setting of .005" - .015". The end play specification is actually .005" - .025" and is acceptable if the "Preferred" setting cannot be obtained.

SERVICE INFORMATION

New Repair Package	4549248
Gasket Package	4504558
Input Clutch Retainer (As Required)	4431609
Transmission Controller (As Required)	5234678

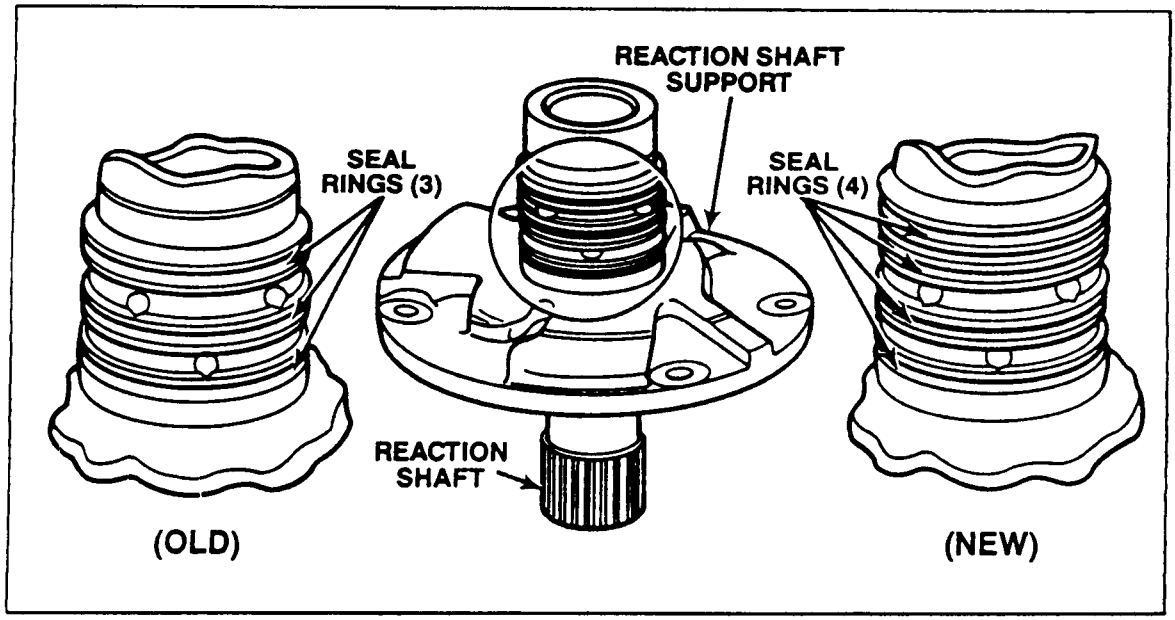

Figure 1

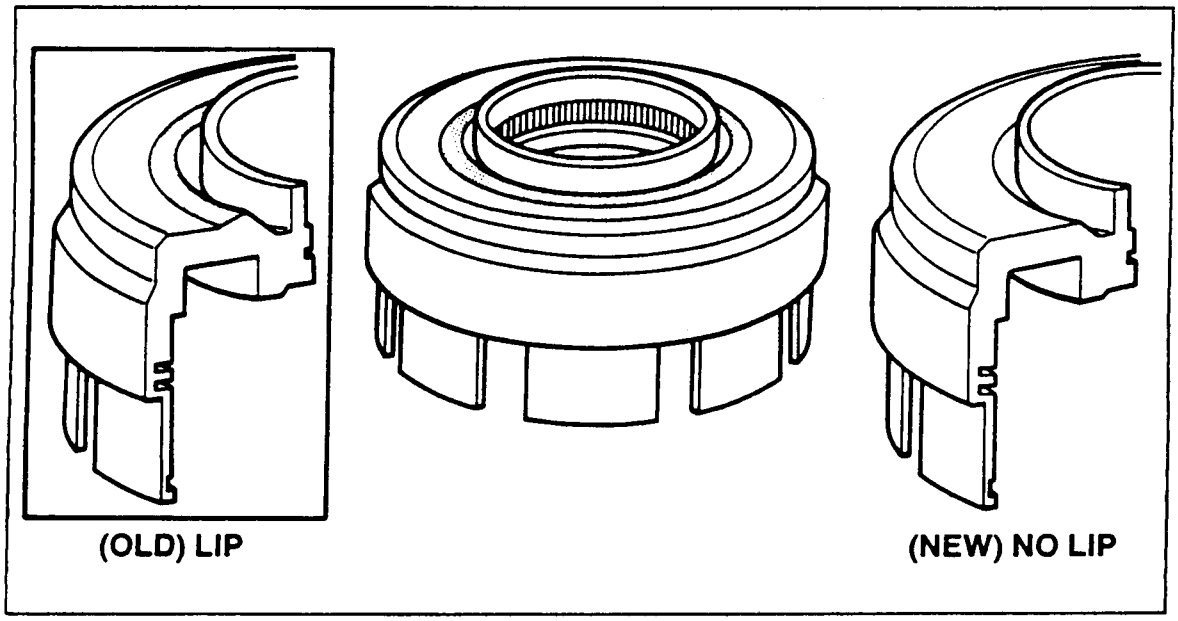

Figure 2

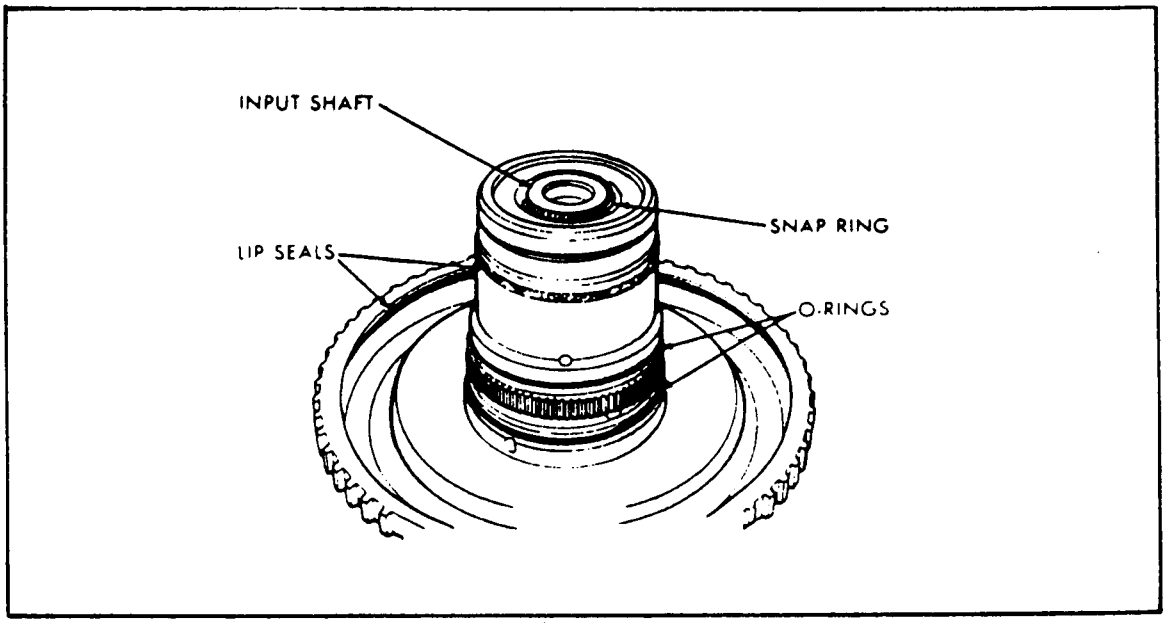

Figure 3

INPUT CLUTCH HUB O-RING CHART

Model Year	Part Number	Location	Color	Cross Section
1989	6501574	Front	Black	.070"
1989	6501548	Rear	Black	.070"
Running '89	6502272	Front	Orange	.070"
Running '89	6502270	Rear	Green	.070"
1990-1/4	6502271	Front	Blue	.103"
1990-1/4	6502269	Rear	Red	.103"

UD/OD REACTION PLATE CHART

1989		1990	
P/N	Thickness	P/N	Thickness
4377185	6.47-6.57 mm	4531570	5.47-5.57 mm
4377186	6.96-7.06 mm	4531569	5.96-6.06 mm
4377187	7.45-7.55 mm	4531568	6.45-6.55 mm
4377188	7.94-8.04 mm	4531567	6.94-7.04 mm